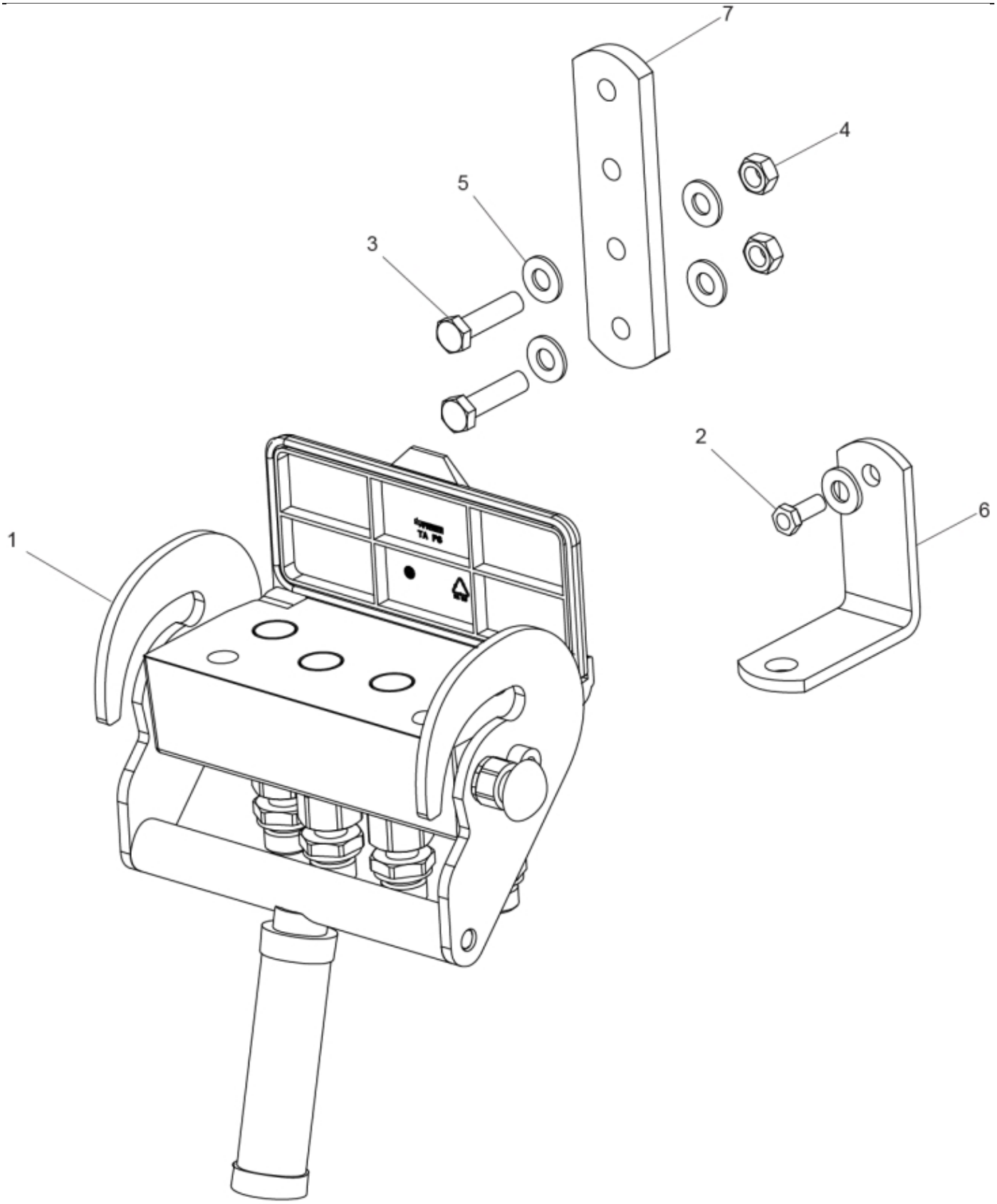

r5221550

© 2025 Jost

Description	Hydro Quick
Part assemblies	Multi coupling, lower part

PartNo	Pos	Qty	Name	Specifications
5044906	1	1	Multi coupling, lower part	Lower part
5002051	2	1	Screw	M6S 8 x 20
5002078	3	2	Screw	M6S 10x40 (8.8)
5011054	4	2	Nut	M6M M10
5013110	5	5	Washer	BRB 10.5x22x2
10301550	6	1	Bracket	
10301551	7	1	Bracket	

© 2025 Jost