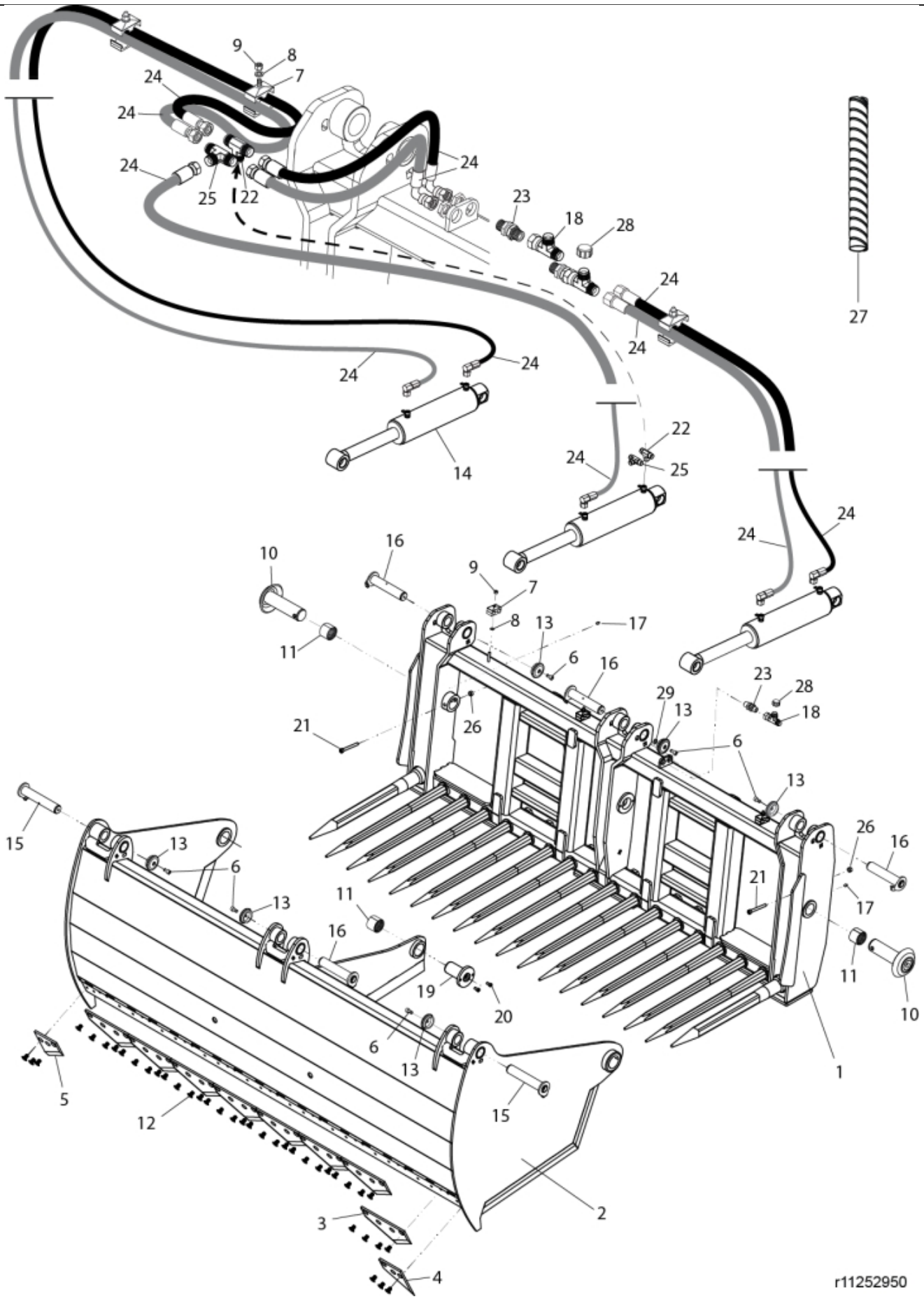
9
8
7
24
24
24
25
22
24
23
18
28
24
27
24
24
24
14
22
24
25
24
24
10
16
9
7
8
13
17
11
6
16
23
28
29
13
18
21
26
6
13
15
13
6
13
11
16
26
16
21
17
11
10
19
20
6
13
1
5
12
15
2
3
4
r11252950

© 2025 Jost

Part assemblies	Silocut 225 SG
Specification	Year From: 7/1/2014 12:00:00 AM
	Year To: 7/31/2016 12:00:00 AM

PartNo	Pos	Qty	Name	Specifications
4501026-17	1	1	Frame, without tines	
60060388-17	2	1	Jaw	
11262629-22	3	8	Cutting edge	250mm
11262627-22	4	1	Cutting edge LH	125mm
11262628-22	5	1	Cutting edge RH	125mm
5004917	6	6	Screw	
5016968	7	3	Hose clamp	
5013101	8	3	Washer	BRB 8,4 x 16
5011553	9	3	Nut	M6M M8 Loc-king
11262660	10	2	Pin	
5018909	11	3	Bushing	
5006041	12	38	Screw	MF6S M12 x 20
5215131	13	6	Locking cover	
60119714-1	14	3	Cylinder	2/4/2026 12:00:00 AM
9020124	15	2	Pin cpl.	
9020126	16	4	Pin cpl.	
5023005	17	2	Greaser	M 10 x 1
5028031	18	2	T-Adapter	
9020128	19	1	Pin cpl.	
5004919	20	2	Screw	MC6S M8x16
5004956	21	2	Screw	MC6S M10 x 90
5027834	22	1	T-Adapter	G3/8" BSPP
11120580	23	2	Adapter cpl.	
10378391	24	1	Hose kit	
1120176	25	1	T-Adapter	R3/8" BSPP
5011554	26	2	Nut	Loc-King M10
5034439	27	4	Protection sleeve	
5028311	28	2	Plug	
5013110	29	1	Washer	BRB 10.5x22x2
11137135	30	1	Decal	Silocut
11137188	31	2	Decal	225 SG
1123674	32	1	Warning decal	"Read manual"
1123673	33	1	Warning decal	
11136459	34	1	Warning decal	Only for North Am. Warning triangle
11136516	35	1	Warning decal	
11136447	36	2	Warning decal	Only for North Am. DANGER
11137324	37	1	Warning decal	"Keep cutting edges sharp"

© 2025 Jost