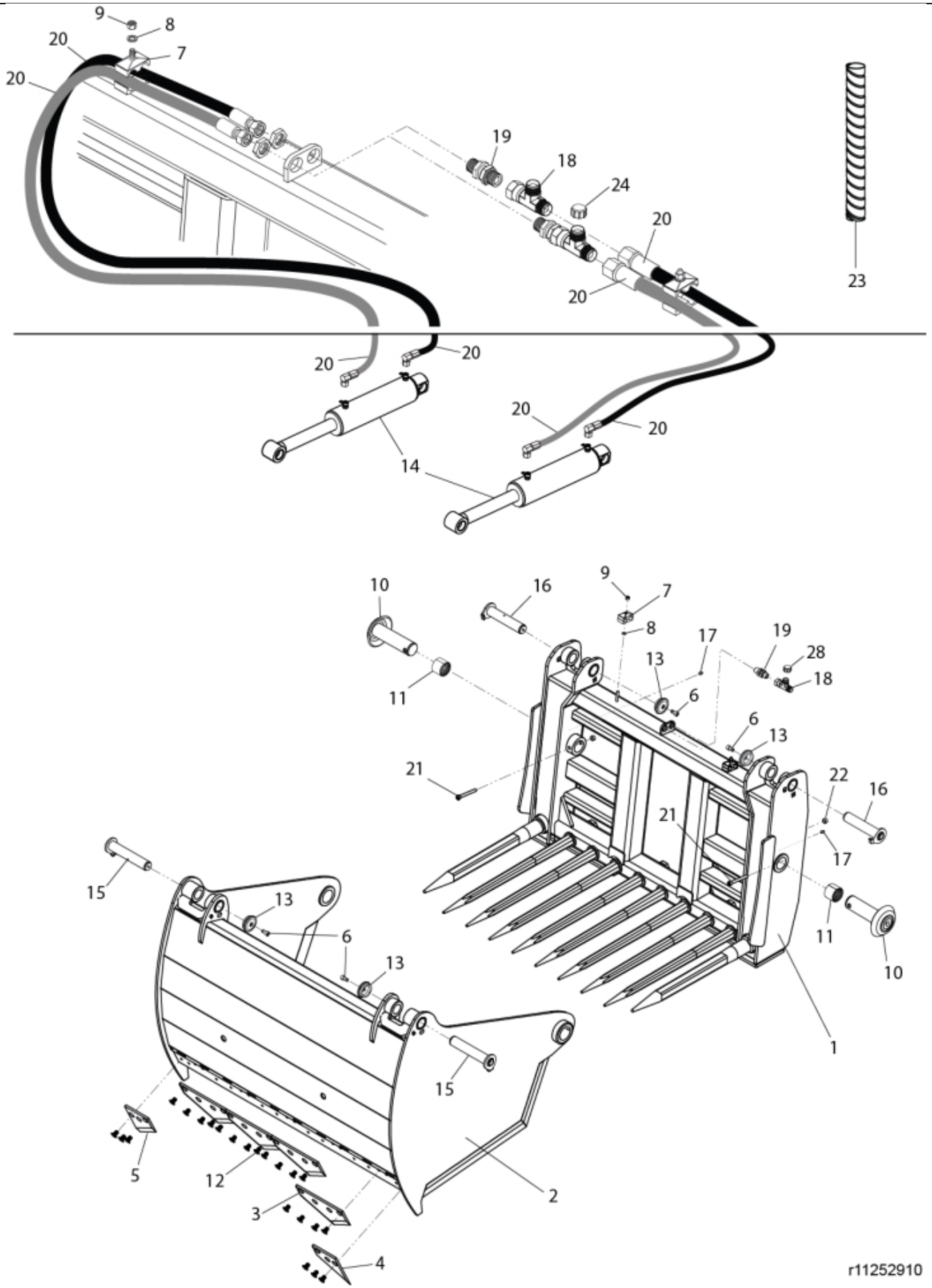
9
8
20
7
20
19
18
24
20
20
23
20
20
20
20
14
20
20
10
16
9
7
8
17
19
28
18
13
6
11
6
13
21
22
16
21
17
15
13
6
13
11
10
1
15
5
12
2
3
4
r11252910

© 2025 Jost

Part assemblies	Silocut 125 SG
Specification	Year From: 7/1/2014 12:00:00 AM
	Year To: 7/31/2016 12:00:00 AM

PartNo	Pos	Qty	Name	Specifications
4501018-17	1	1	Frame, without tines	
11262671-17	2	1	Jaw	
11262629-22	3	4	Cutting edge	250mm
11262627-22	4	1	Cutting edge LH	125mm
11262628-22	5	1	Cutting edge RH	125mm
5004917	6	4	Screw	
5016968	7	2	Hose clamp	
5013101	8	2	Washer	BRB 8,4 x 16
5011553	9	2	Nut	M6M M8 Loc-king
11262660	10	2	Pin	
5018909	11	2	Bushing	
5006041	12	22	Screw	MF6S M12 x 20
5215131	13	4	Locking cover	
60119799-1	14	2	Cylinder	6/3/2026 12:00:00 AM
9020124	15	2	Pin cpl.	
9020126	16	2	Pin cpl.	
5023005	17	2	Greaser	M 10 x 1
5028031	18	2	T-Adapter	
11120580	19	2	Adapter cpl.	
10378383	20	1	Hose kit	
5004956	21	2	Screw	MC6S M10 x 90
5011554	22	2	Nut	Loc-King M10
5034439	23	2	Protection sleeve	
5028311	24	2	Plug	
11137135	25	1	Decal	Silocut
11137180	26	2	Decal	125 SG
1123674	27	1	Warning decal	"Read manual"
1123673	28	1	Warning decal	
11136459	29	1	Warning decal	Only for North Am. Warning triangle
11136516	30	1	Warning decal	
11136447	31	2	Warning decal	Only for North Am. DANGER
11137324	32	1	Warning decal	"Keep cutting edges sharp"

© 2025 Jost