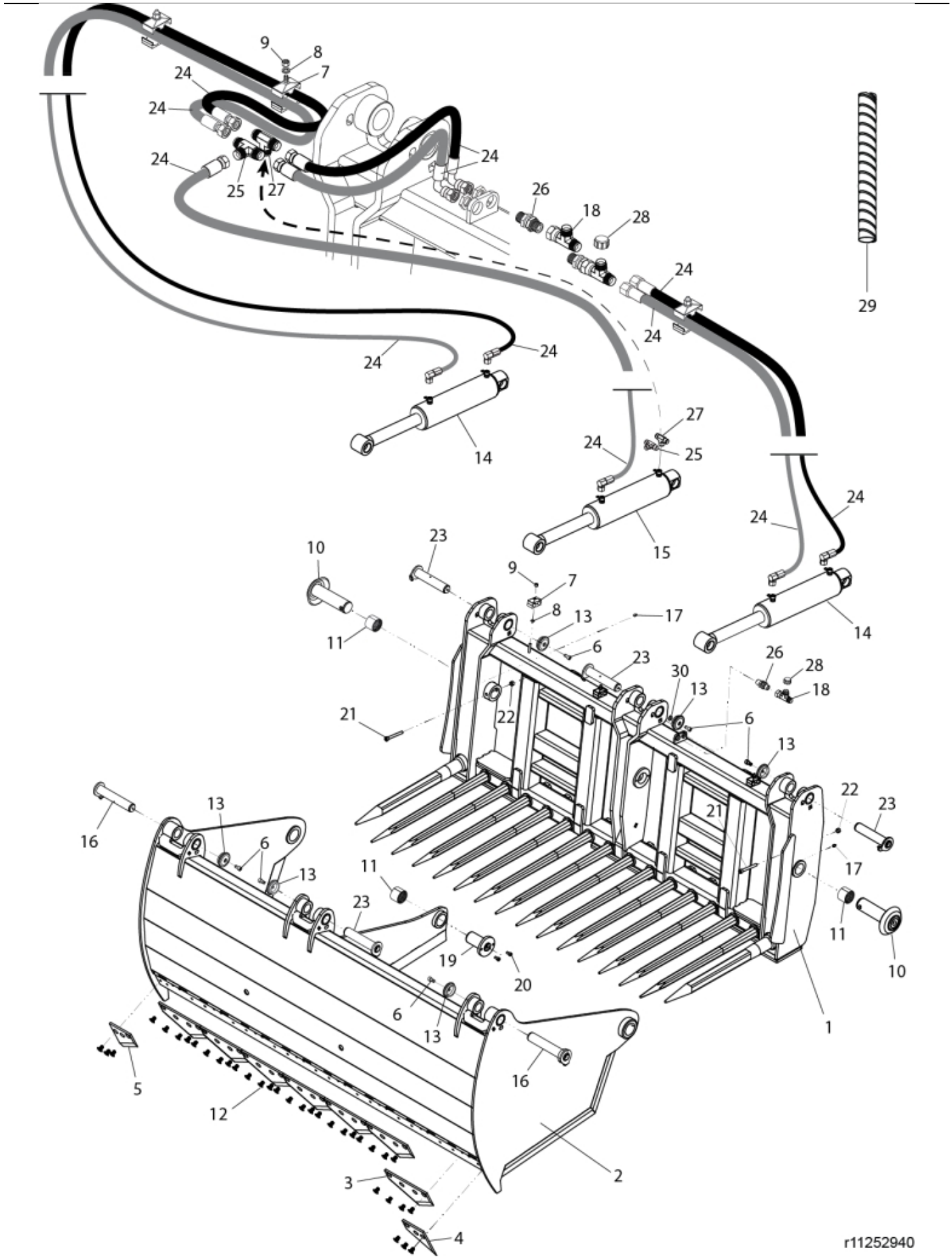

© 2025 Jost

Part assemblies	Silocut 200 SG
Specification	Year From: 7/1/2014 12:00:00 AM
	Year To: 7/31/2016 12:00:00 AM

PartNo	Pos	Qty	Name	Specifications
4501024-17	1	1	Frame, without tines	
11262741-17	2	1 PCS	Jaw	
11262629-22	3	7	Cutting edge	250mm
11262627-22	4	1	Cutting edge LH	125mm
11262628-22	5	1	Cutting edge RH	125mm
5004917	6	6	Screw	
5016968	7	3	Hose clamp	
5013101	8	3	Washer	BRB 8,4 x 16
5011553	9	3	Nut	M6M M8 Loc-king
11262660	10	2	Pin	
5018909	11	3	Bushing	
5006041	12	34	Screw	MF6S M12 x 20
5215131	13	6	Locking cover	
60119714-1	14	2	Cylinder	2/4/2026 12:00:00 AM
60119799-1	15	1	Cylinder	6/3/2026 12:00:00 AM
9020124	16	2	Pin cpl.	
5023005	17	2	Greaser	M 10 x 1
5028031	18	2	T-Adapter	
9020128	19	1	Pin cpl.	
5004919	20	2	Screw	MC6S M8x16
5004956	21	2	Screw	MC6S M10 x 90
5011554	22	2	Nut	Loc-King M10
9020126	23	4	Pin cpl.	
10378389	24	1	Hose kit	
1120176	25	1	T-Adapter	R3/8" BSPP
11120580	26	2	Adapter cpl.	
5027834	27	1	T-Adapter	G3/8" BSPP
5028311	28	2	Plug	
5034439	29	4	Protection sleeve	
5013110	30	1	Washer	BRB 10.5x22x2
11137135	31	1	Decal	Silocut
11137186	32	2 PCS	Decal	200 SG
1123674	33	1	Warning decal	"Read manual"
1123673	34	1	Warning decal	
11136459	35	1	Warning decal	Only for North Am. Warning triangle
11136516	36	1	Warning decal	
11136447	37	2	Warning decal	Only for North Am. DANGER
11137324	38	1	Warning decal	"Keep cutting edges sharp"

© 2025 Jost