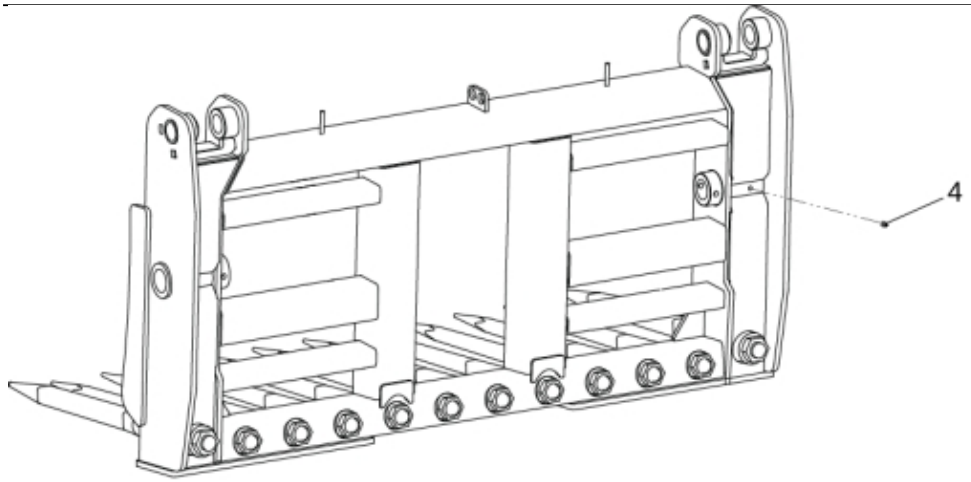

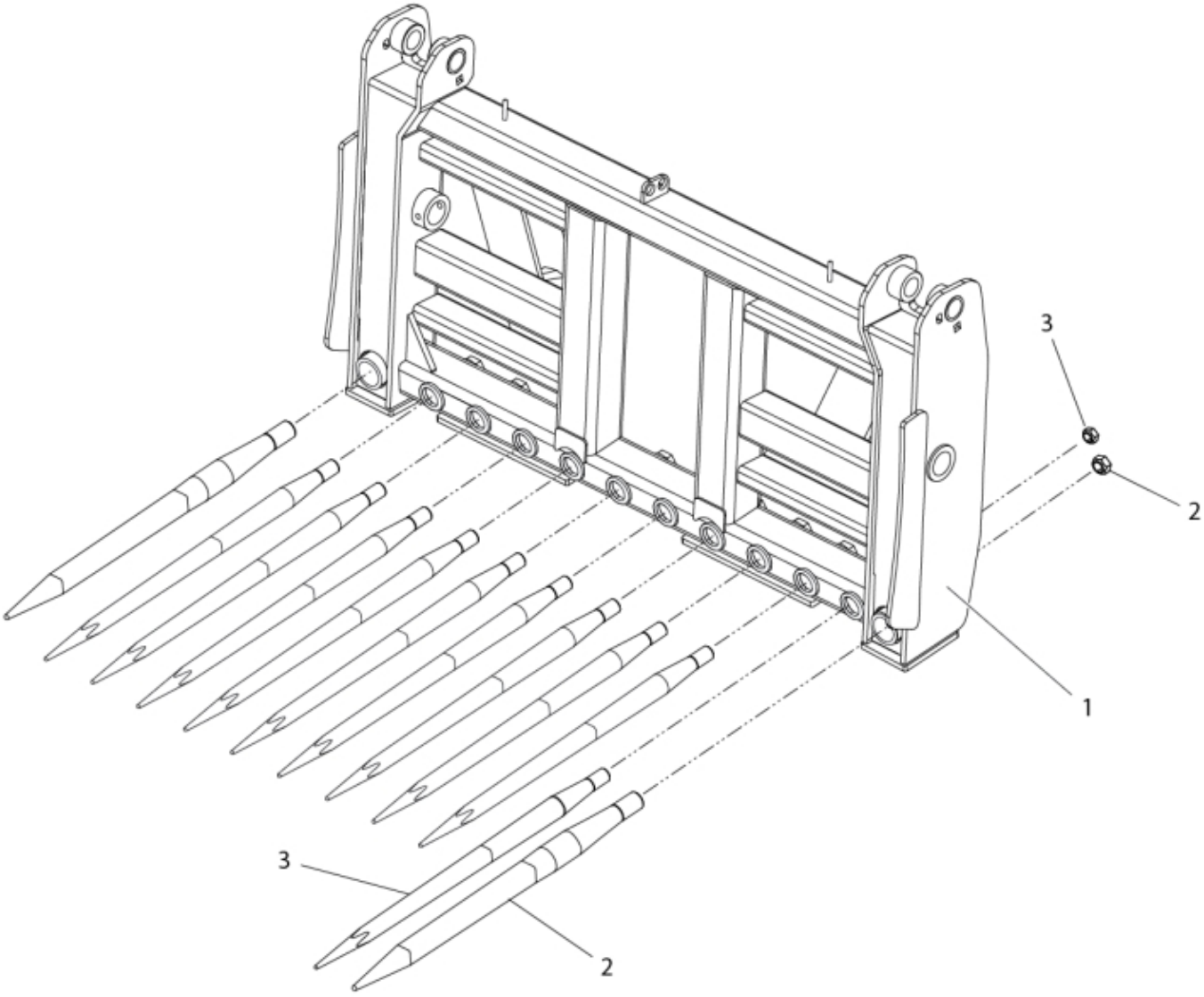

r11262726

© 2025 Jost

Part assemblies Frame 150 SG

PartNo	Pos	Qty	Name	Specifications
4501020-17	1	1	Frame, without tines	
5068117-17	2	2	Tine with nut	L=820mm (replaces 5068107)
5068114-17	3	10	Tine with nut	L=827mm (replaces 5068003)
5023005	4	2	Greaser	M 10 x 1

© 2025 Jost