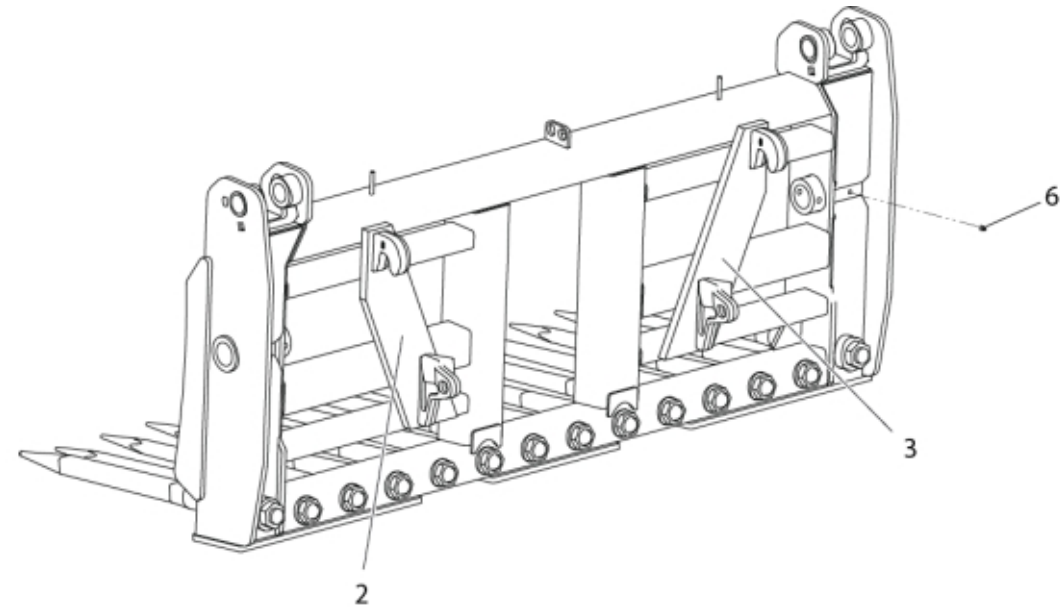

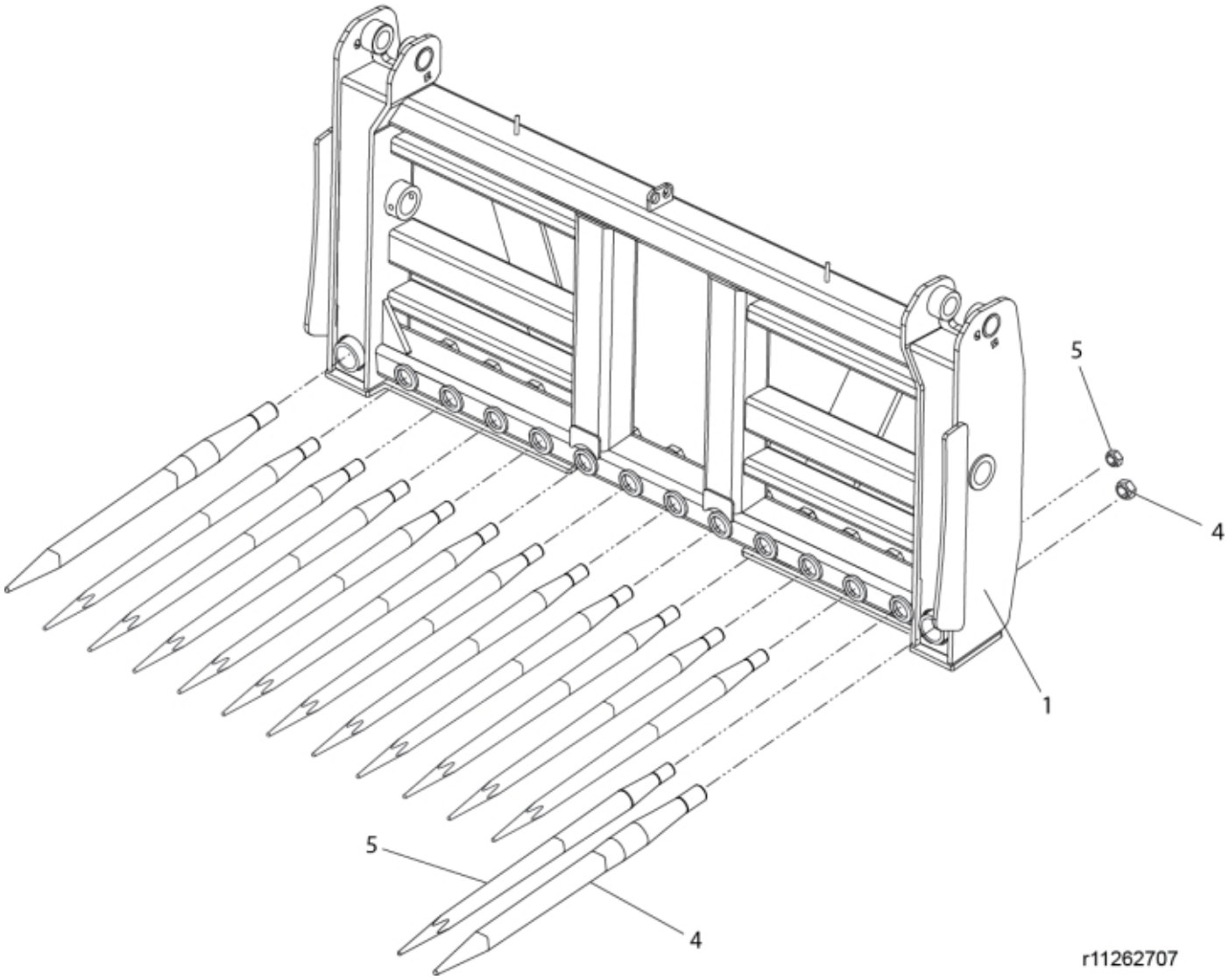

© 2025 Jost

Part assemblies Frame 175 SG Euro

PartNo	Pos	Qty	Name	Specifications
4501023-17	1	1	Frame, without tines	
11260604	2	1	Implement hook LH	Euro
11260605	3	1	Implement hook RH	Euro
5068117-17	4	2	Tine with nut	L=820mm (replaces 5068107)
5068114-17	5	12	Tine with nut	L=827mm (replaces 5068003)
5023005	6	2	Greaser	M 10 x 1

© 2025 Jost