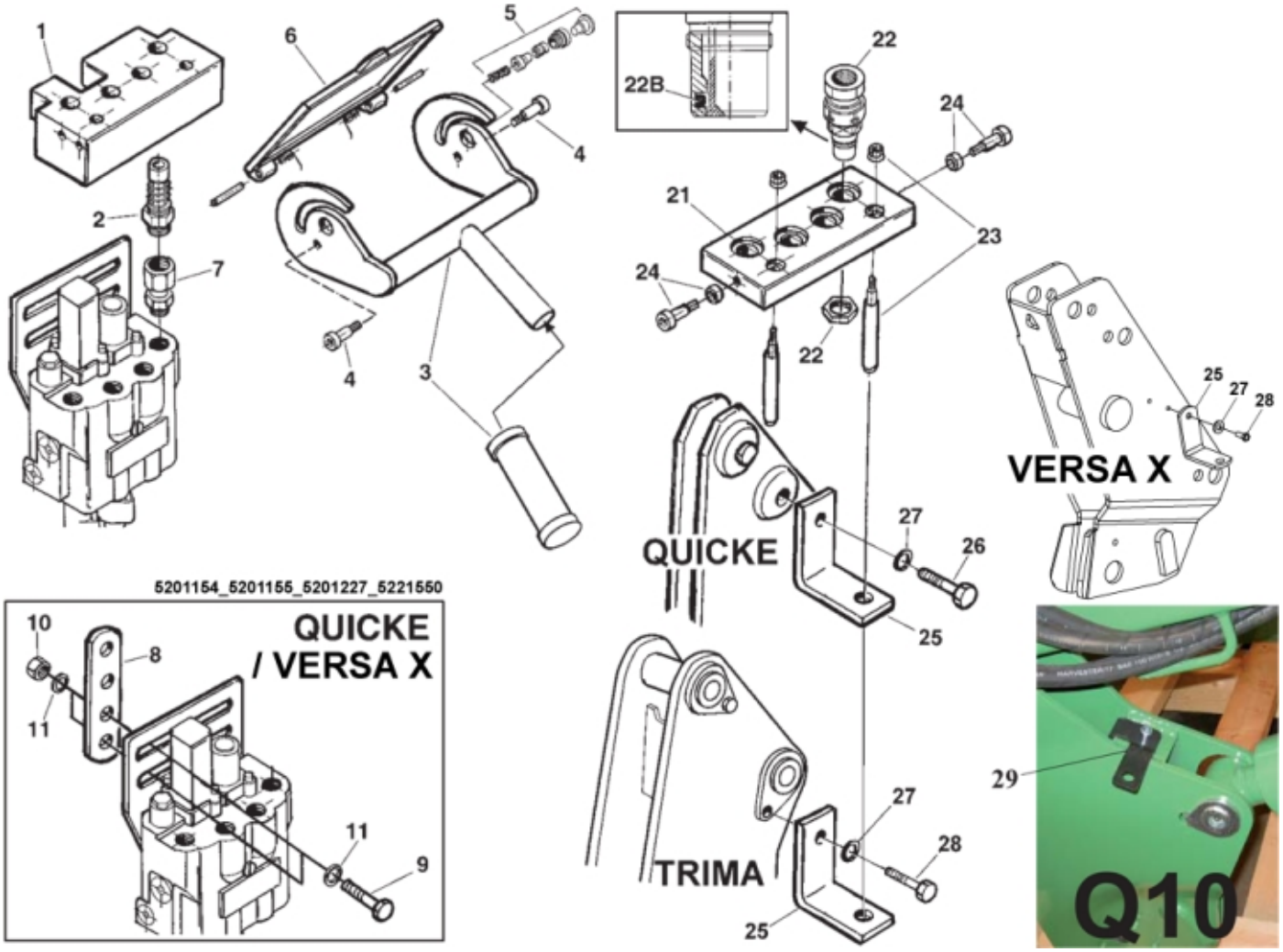

5201154_5201155_5201227_5221550

© 2025 Jost

Part assemblies	Lower part
Specification	Year From: 1/1/2002 12:00:00 AM

PartNo	Pos	Qty	Name	Specifications
5201155		1	Lower part	1/1/2002 12:00:00 AM
5044905	1	1	Lower part HQ 4	
10301544	2	4	Coupler (F)	
5044904	3	1	Lever	
10301547	4	2	Screw kit	VP4
4501199	5	1	Safety kit	
5044907	6	1	Cap	
10301552	7	4	Coupling	
10301551	8	1	Bracket	
5002078	9	2	Screw	M6S 10x40 (8.8)
5011054	10	2	Nut	M6M M10
5013110	11	4	Washer	BRB 10.5x22x2

© 2025 Jost