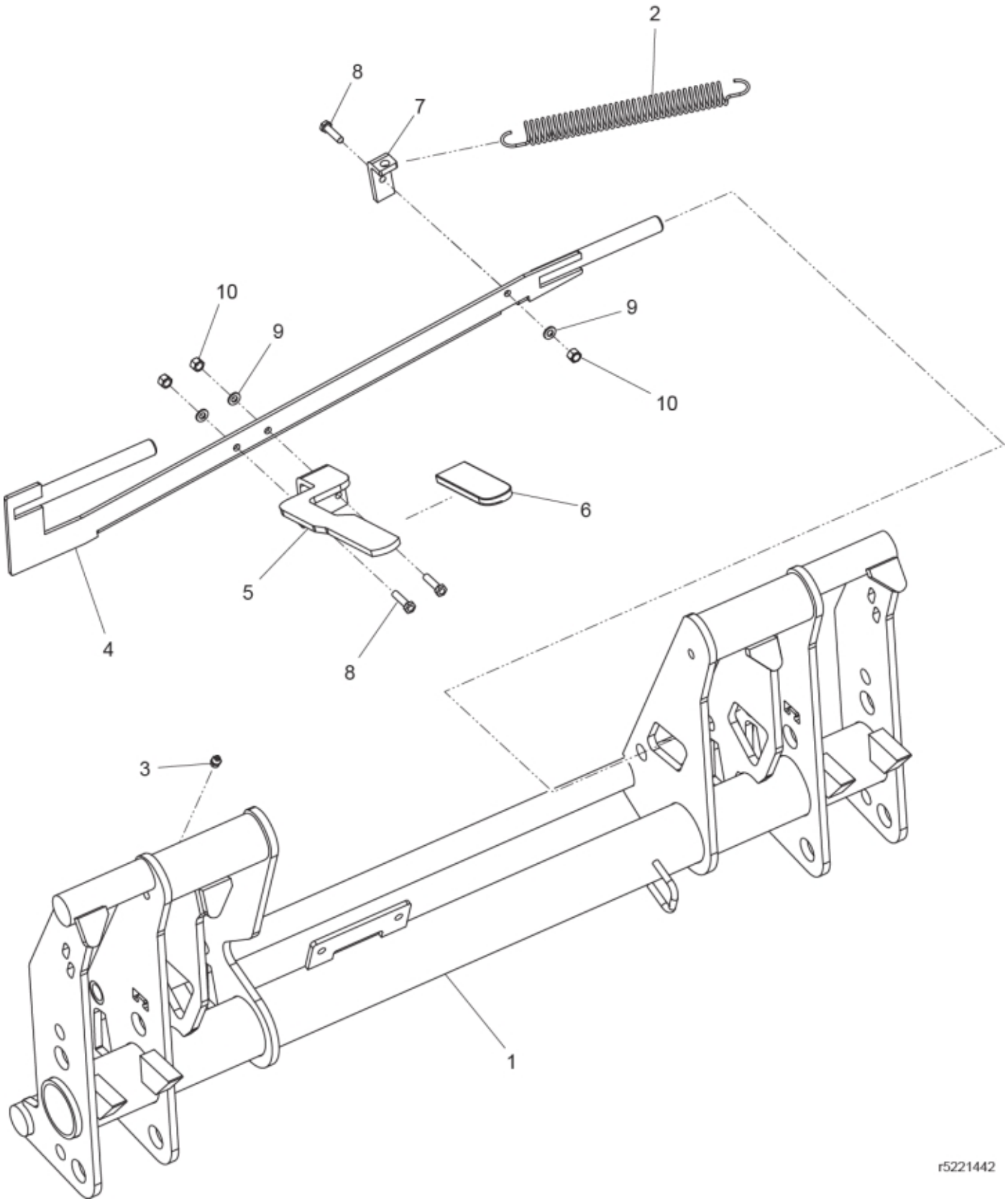



© 2025 Jost

| | |
|---|---|
| **Description** | Tool carrier |
| **Part assemblies** | Euro/SMS |

| PartNo | Pos | Qty | Name | Specifications |
|---|---|---|---|---|
| 5221423-25 | 1 | 1 PCS | Euro/SMS | Zetor Red |
| 1101035 | 2 | 1 | Spring | |
| 5023005 | 3 | 1 | Greaser | M 10 x 1 |
| 5221443-25 | 4 | 1 | Locking plate | Zetor Red |
| 60057987-25 | 5 | 1 PCS | Handle | Zetor Red. Replaces 5221552-25. |
| 5022144 | 6 | 1 | Cover | |
| 5221500-25 | 7 | 1 PCS | Bracket | Zetor Red |
| 5002053 | 8 | 3 | Screw | M6S 8 x 30 |
| 5013101 | 9 | 3 | Washer | BRB 8,4 x 16 |
| 5011553 | 10 | 3 | Nut | M6M M8 Loc-king |


© 2025 Jost