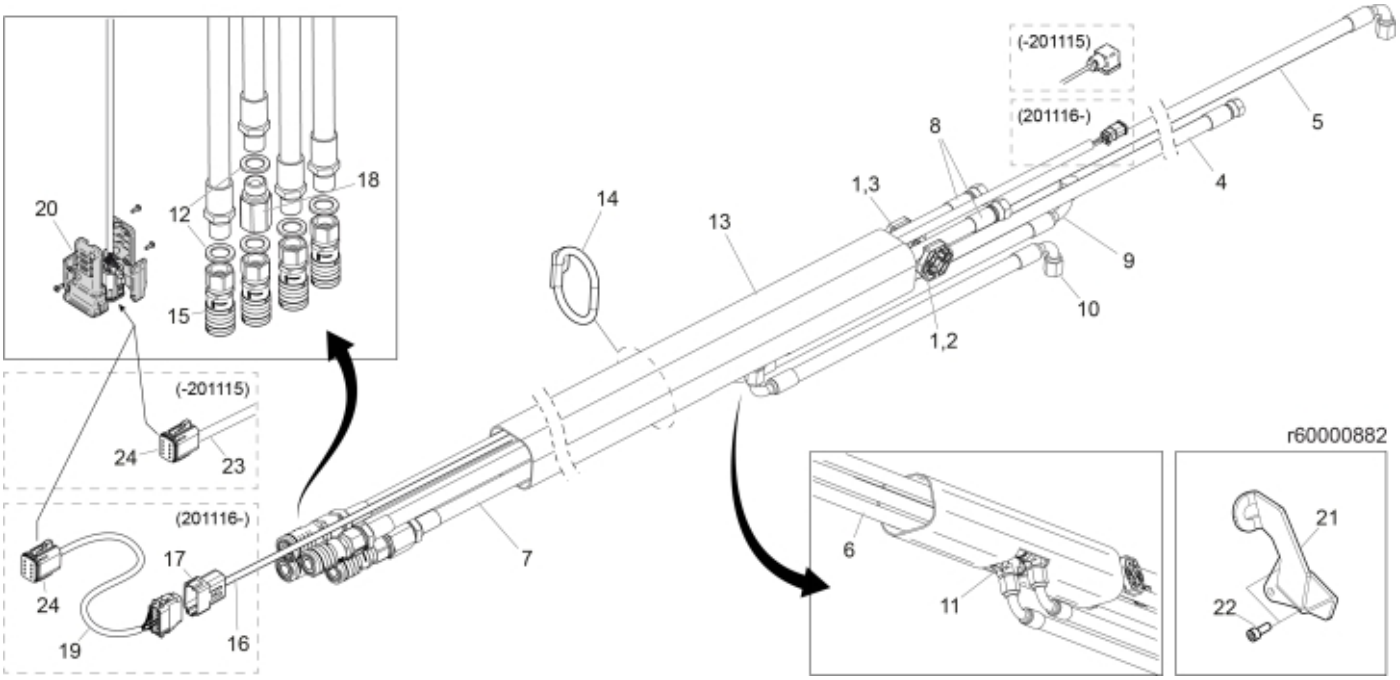
(-201115)
(201116-)
8
5
4
1,3
14
13
9
10
1,2
20
12
18
15
(-201115)
24
23
(201116-)
17
24
19
16
7
r60000882
6
11
21
22

© 2025 Jost

Description	3rd service
Part assemblies	Main hose kit, FF

PartNo	Pos	Qty	Name	Specifications
5221880	1	2	Hose clamp	
5004030	2	2	Screw	MC6S M6 x 45
20708137	3	2	Nut	M6 FZB, 708137
9031712	4	1	Hose	3/8" L=3860mm
9031716	5	1	Hose	3/8" L=4280mm
9032331	6	1	Hose	3/8" L=850mm
9032332	7	1	Hose	3/8" L=775mm
9032333	8	2	Hose	3/8" L=3040mm
9031710	9	1	Hose	3/8" L=520mm
9031939	10	1	Hose	3/8" L=520mm
5028142	11	2	Adaptor	JIC 2x9/16 1x3/4
5013853	12	5	Dowty washer	Tredo 1/2", Part is included in kit 60007907 Hose cpl., 9032177 Hose cpl.
5051949	13	1	Hose cover	L=850
5221966	14	1	Hose guide	
5044976	15	4	Coupling	3/8" (5044946)
59050122	16	1	Electr. Cable	QCS (12P connector) for loaders produced from 2020/11/16
5050918	17	1	• Connector	Deutsch DT 12 pin female
1120077	18	1	Restrictor valve	
59050115	19	1	Electr. Cable	QCS to LCS for loaders produced from 2020/11/16
5103054	20	1	Connector handle	
60049421	21	1	Holder kit	
5004061	22	2	• Screw	MC6S M8x20
5102206	23	1	Harness	8-pin Deutsch for loaders produced until 2020/11/15
5101083	24	1	• Connector, male	8-Pole

© 2025 Jost