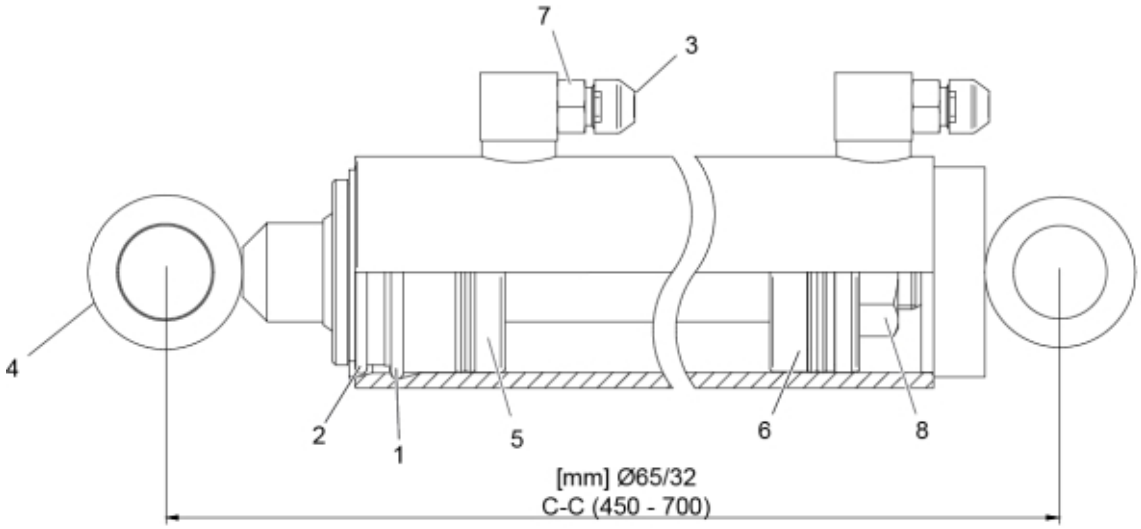

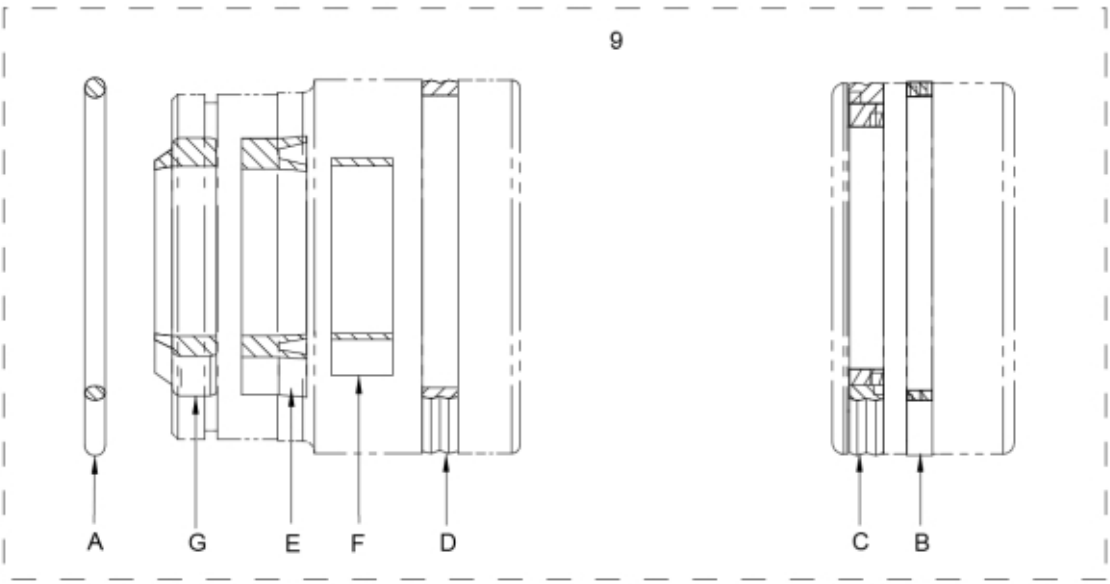

r12725410

© 2025 Jost

Description	65/32
Part assemblies	Cylinder
Specification	Specification: Glossy Black

PartNo	Pos	Qty	Name	Specifications
5016668	1	1	Retaining ring	
5016608	2	1	Circlip	
5028083	3	2	Plug	
12725413	4	1	Piston rod	
12716111	5	1	Bearing	
12706712	6	1	Piston	
5028118	7	2	Adapter short cpl.	9/16" UNF JIC
5011930	8	1	Nut	M6M M24
5034115	9	1	Seal kit	
5037242	A	1	• O-ring	58,74 x 3,53
5040012	B	1	• Guide ring	65/60 x 5,5
5040022	C	1	• Piston seal	65/49,5 x 6,3
5039002	D	1	• Cover seal	65 x 59,6 x 6,2
5040057	E	1	• Seal kit	43 x 31 x 10
5040058	F	1	• Guide ring	35 x 9.6
5040059	G	1	• Wiper	42 x 31 x 10

© 2025 Jost