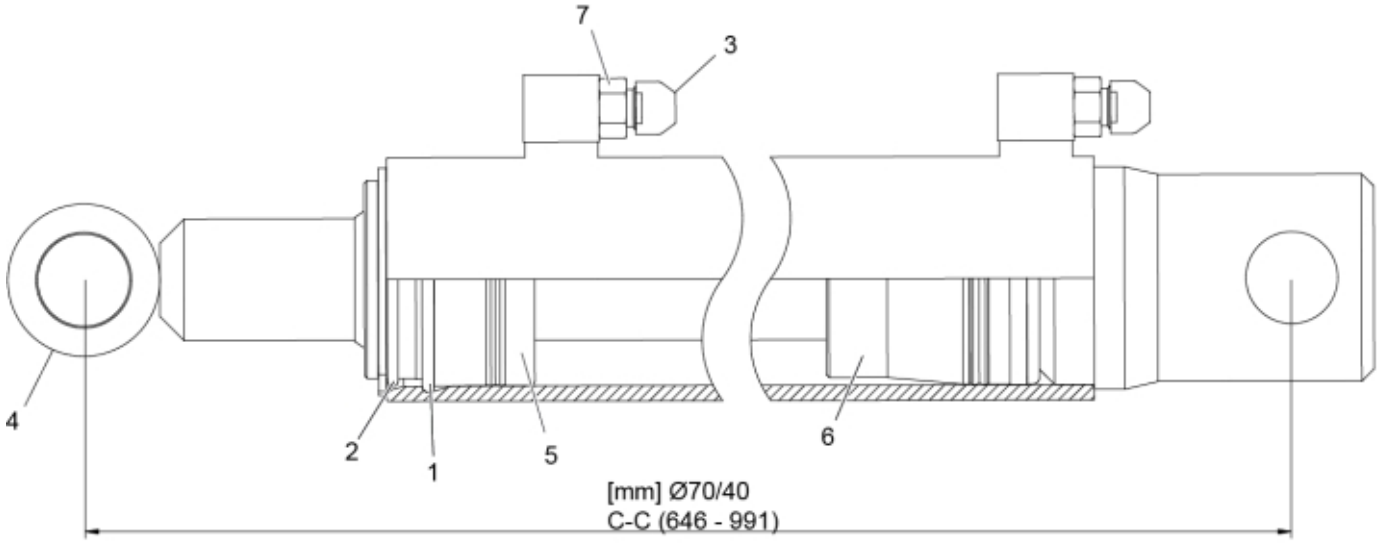

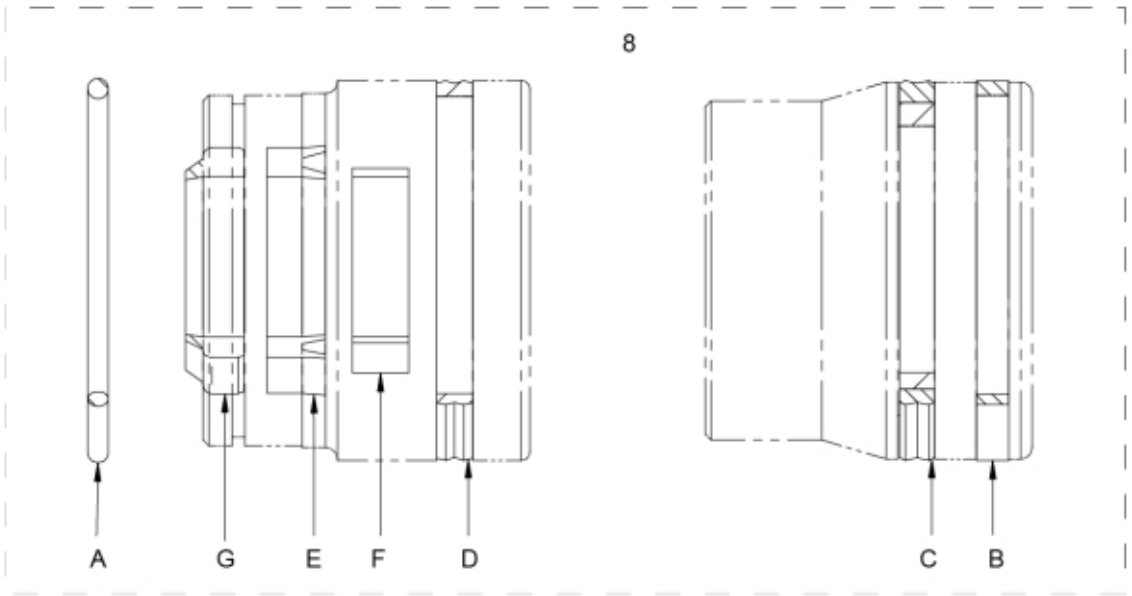

r12722810

© 2025 Jost

Description	70/40
Part assemblies	Cylinder
Specification	Specification: Glossy Black

PartNo	Pos	Qty	Name	Specifications
5016621	1	1	Retaining ring	
5016669	2	1	Retaining ring	
5028083	3	2	Plug	
12722813	4	1	Piston rod	
12707011	5	1	Bearing	D70/40
12707012	6	1	Piston	D70
5028118	7	2	Adapter short cpl.	9/16" UNF JIC
5033704	8	1	Seal kit	
5037243	A	1	O-ring	63,09x3,53
5040013	B	1	Guide ring	70/65x5,5
5040023	C	1	Piston seal	70/54,5x6,3
5039003	D	1	Cover seal	70 x 64,6 x 6,2
5038254	E	1	Seal	40/50x10
5040010	F	1	Guide ring	40/45x9,7
5038101	G	1	Wiper	40/50x7/10

© 2025 Jost