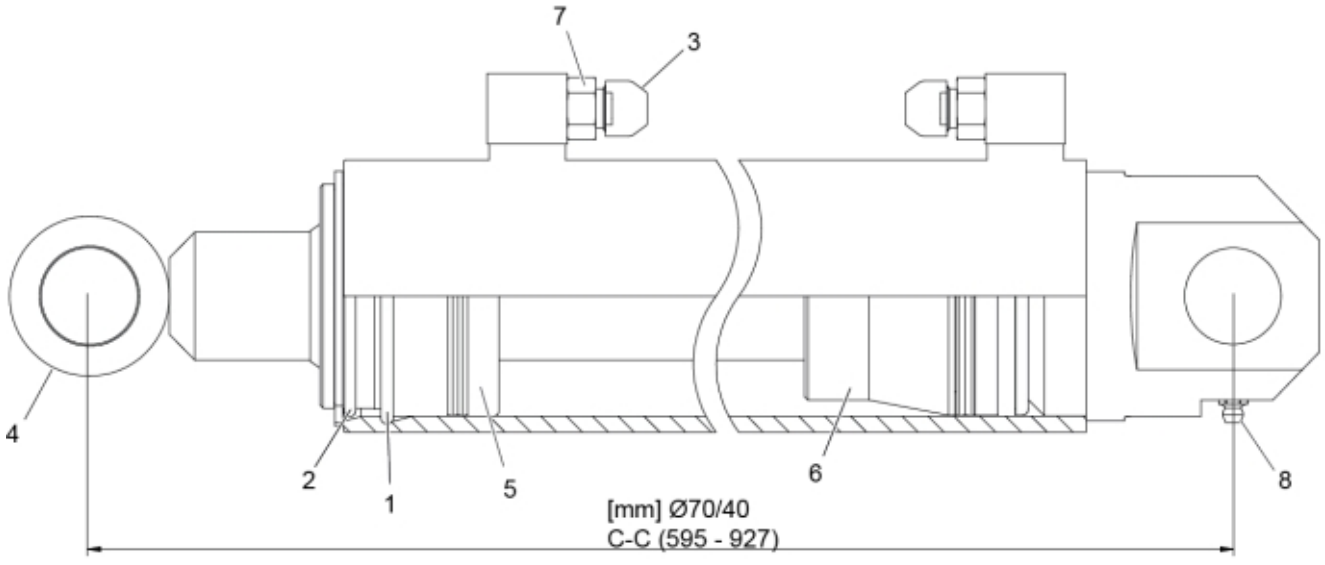

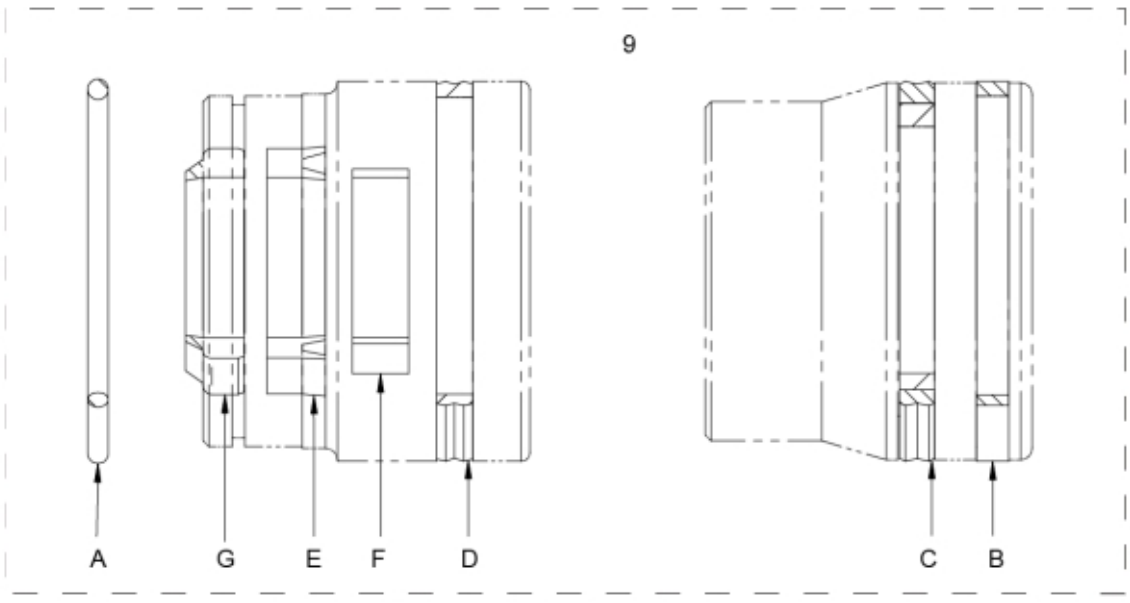

r12722910

© 2025 Jost

Description	75/40
Part assemblies	Cylinder
Specification	Specification: Glossy Black

PartNo	Pos	Qty	Name	Specifications
5016665	1	1	Retaining ring	
5016618	2	1	Retaining ring	
5028083	3	2	Plug	
12722913	4	1	Piston rod	
12707511	5	1	Bearing	D75/40
12707512	6	1	Piston	D75
5028118	7	2	Adapter short cpl.	9/16" UNF JIC
5021901	8	2	Grease fitting	M6
5033705	9	1	Seal kit	
5037239	A	1	• O-ring	68.26x3x53
5040014	B	1	• Guide ring	75/70x5.5
5040024	C	1	• Piston seal	75/59.5x6.3
5039004	D	1	• Cover seal	75 x 69.6 x 6.2
5038254	E	1	• Seal	40/50x10
5040010	F	1	• Guide ring	40/45x9,7
5038101	G	1	• Wiper	40/50x7/10

© 2025 Jost