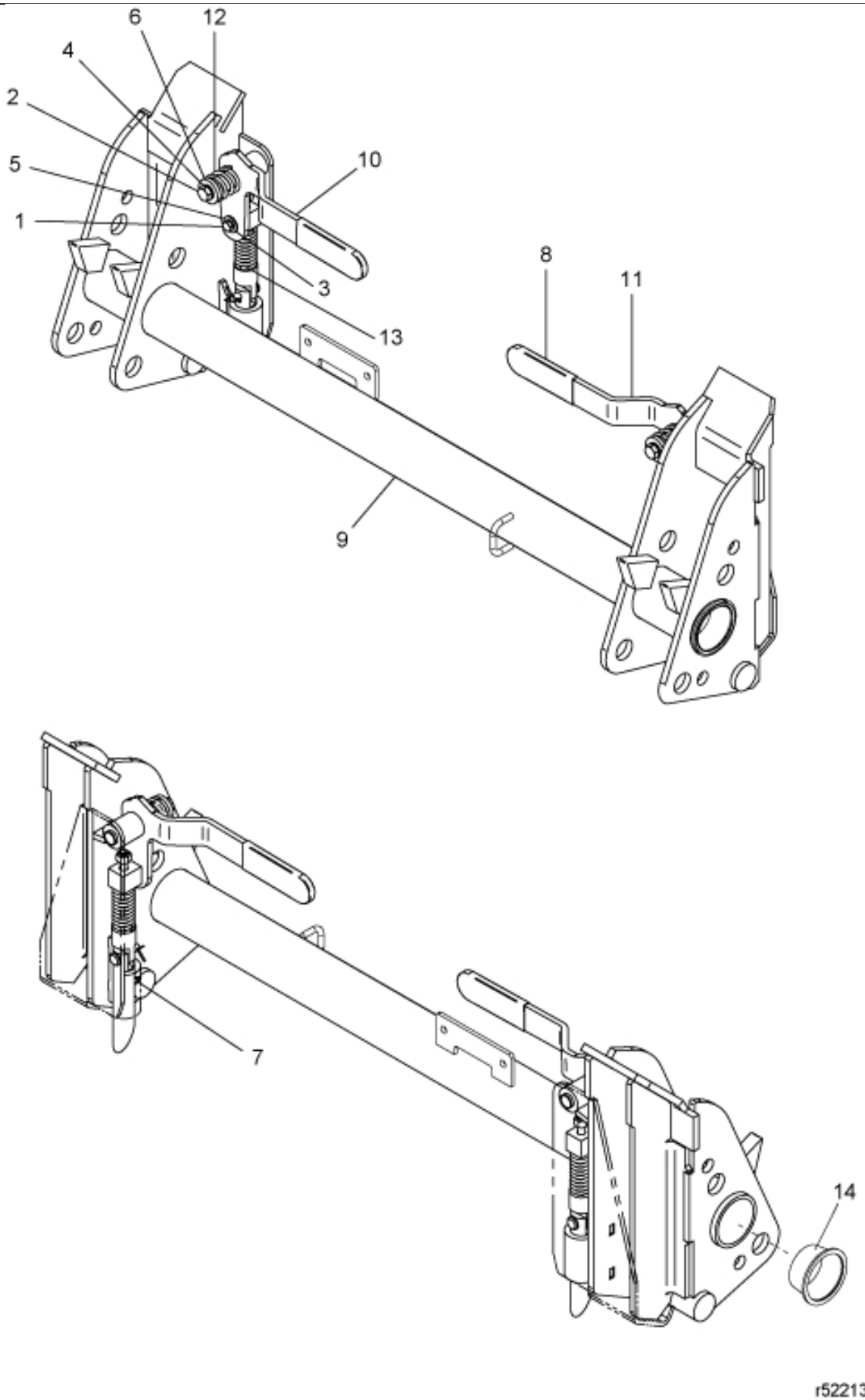

© 2025 Jost

Description	Tool carrier
Part assemblies	Skid Steer
Specification	Year To: 12/31/2016 12:00:00 AM

PartNo	Pos	Qty	Name	Specifications
5221281-11		1	Skid Steer	12/31/2016 12:00:00 AM
5002051	1	2	Screw	M6S 8 x 20
5002103	2	2	Screw	M12 x 35
5013404	3	2	Spring washer	8,1x14,8x2
5013408	4	2	Spring washer	FBB 12,2 x 21,1 x 2,5
5013916	5	2	Washer	8,4x24x2
5013924	6	2	Washer	13x36x6
5021901	7	2	Grease fitting	M6
5022144	8	2	Cover	
5221282-11	9	1	Tool carrier	New Holland Blue
5221533	10	1	Handle LH	
5221534	11	1	Handle RH	
5221539	12	2	Spring	
60017709	13	2	Pin cpl.	replaces 5221580
5221573	14	2	Plastic cover	

© 2025 Jost