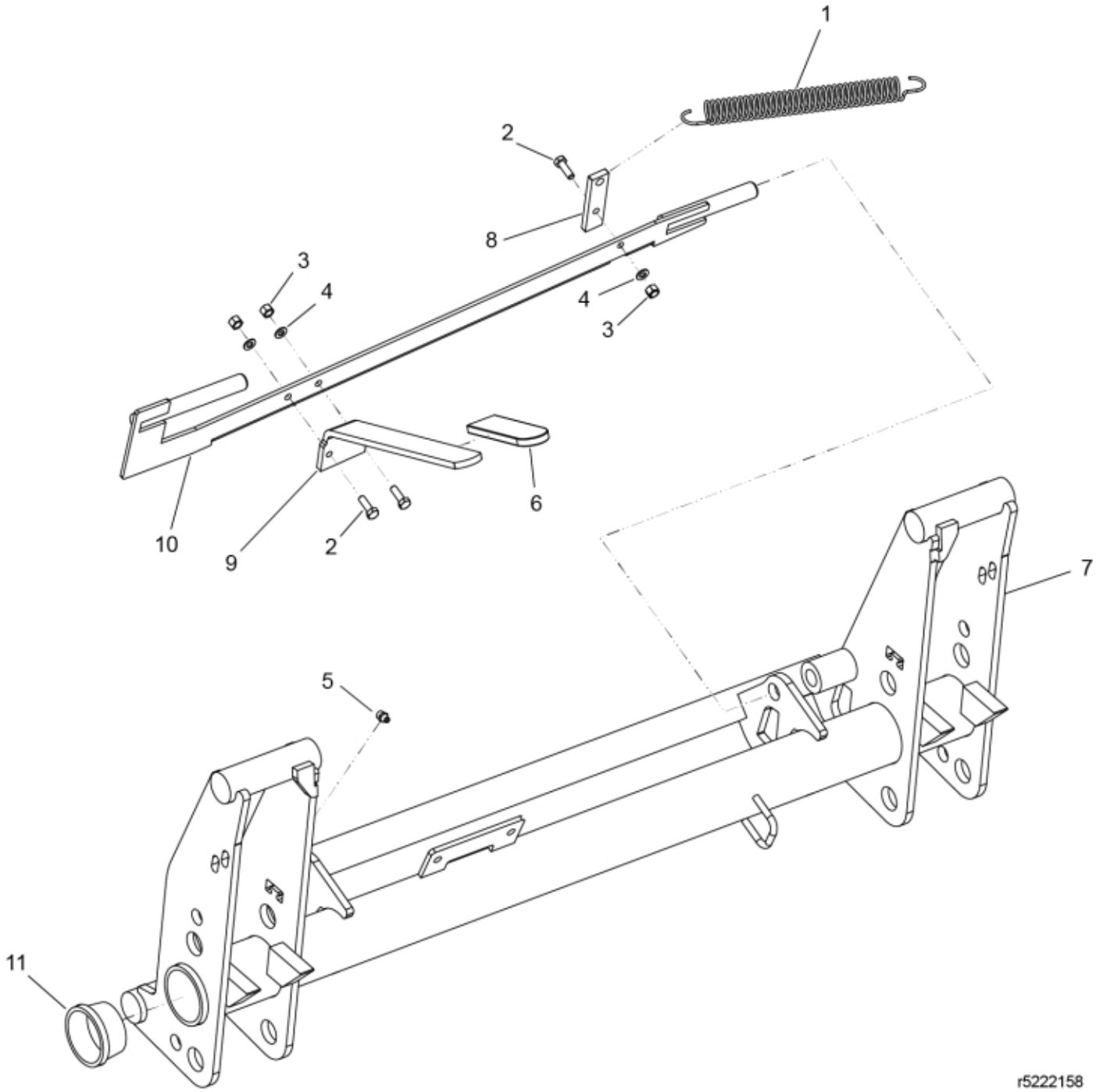

© 2025 Jost

Description	Tool carrier
Part assemblies	Euro
Specification	Specification: New Holland Blue

PartNo	Pos	Qty	Name	Specifications
5222158-11		1	Euro	New Holland Blue
1101035	1	1	Spring	
5002053	2	3	Screw	M6S 8 x 30
5011553	3	3	Nut	M6M M8 Loc-king
5013101	4	3	Washer	BRB 8,4 x 16
5023005	5	1	Greaser	M 10 x 1
5022144	6	1	Cover	
5222148-11	7	1	Tool carrier	New Holland Blue
5221512-1	8	1 PCS	Bracket	Glossy Black
5221514-1	9	1 PCS	Handle	Glossy Black
5221594-1	10	1	Locking plate	Glossy Black
5221573	11	2	Plastic cover	

© 2025 Jost