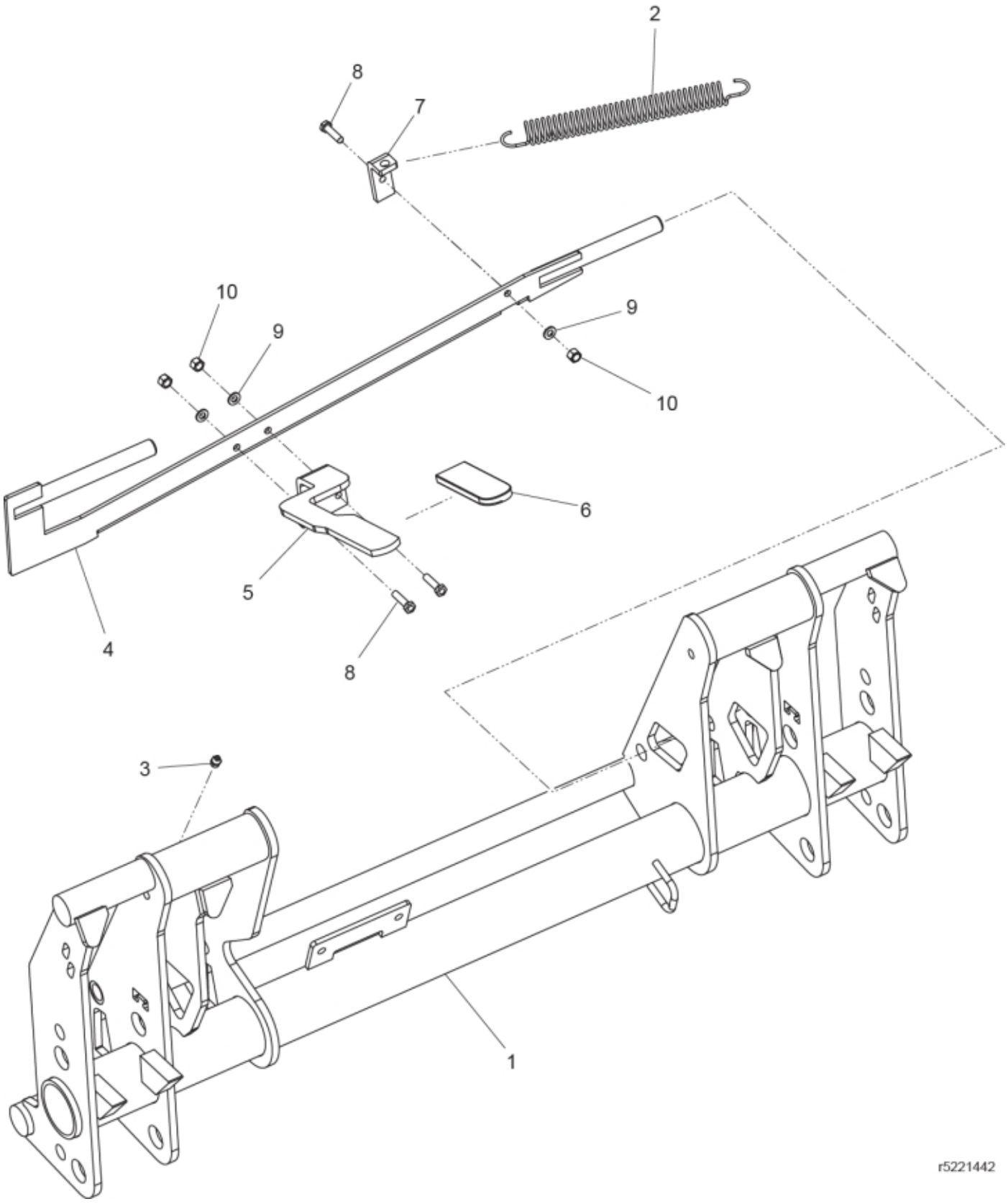

© 2025 Jost

Description	Tool carrier
Part assemblies	Euro/SMS

PartNo	Pos	Qty	Name	Specifications
5221423-7	1	1 PCS	Euro/SMS	Grey
1101035	2	1	Spring	
5023005	3	1	Greaser	M 10 x 1
5221443-7	4	1	Locking plate	Grey
60057987-7	5	1 PCS	Handle	Grey. Replaces 5221552-7.
5022144	6	1	Cover	
5221500-7	7	1 PCS	Bracket	Grey
5002053	8	3	Screw	M6S 8 x 30
5013101	9	3	Washer	BRB 8,4 x 16
5011553	10	3	Nut	M6M M8 Loc-king

© 2025 Jost