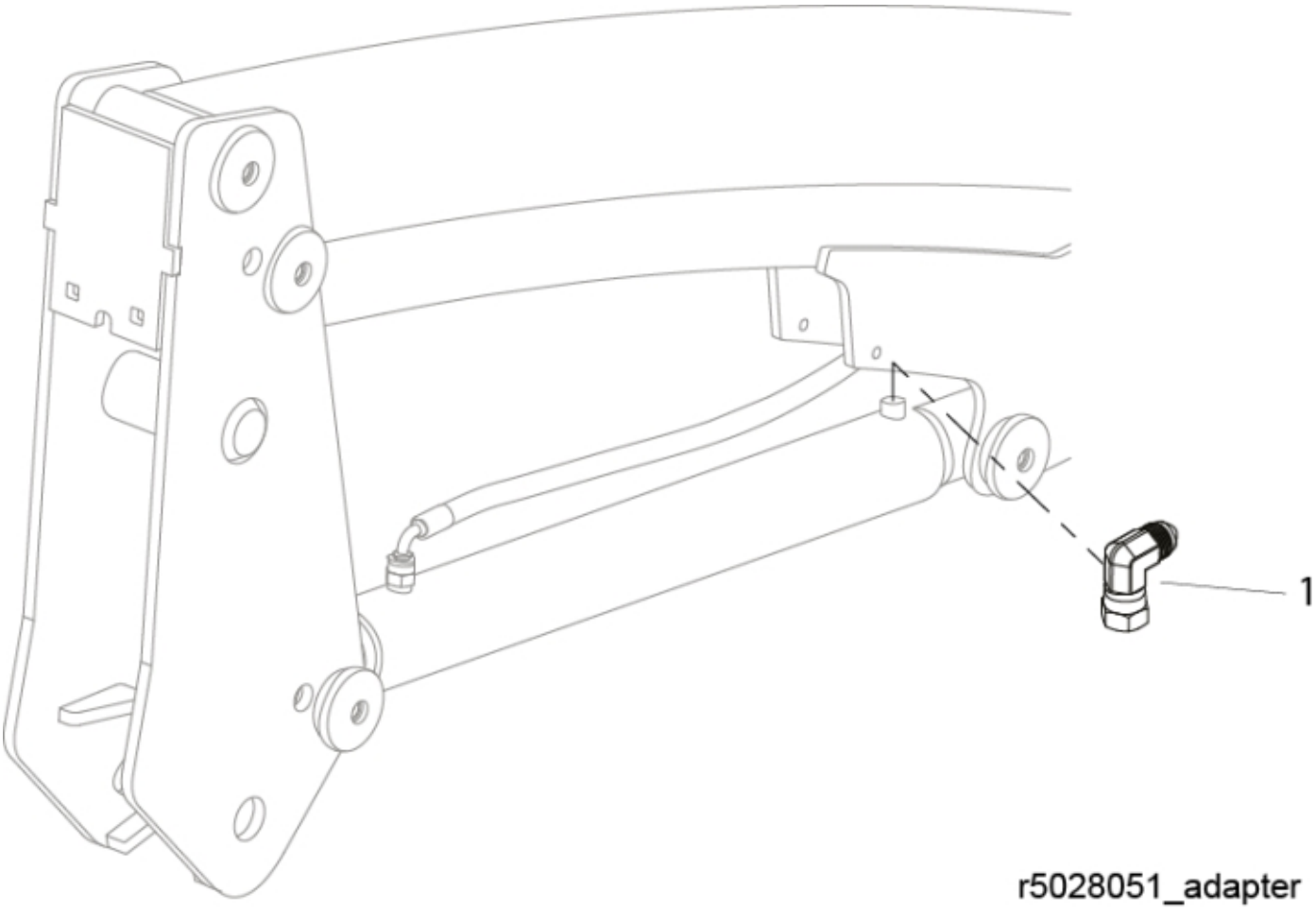

© 2025 Jost

Part assemblies	Adaptor
Specification	Specification: UNF 9/16 -18 JIC 37° female 90°

PartNo	Pos	Qty	Name	Specifications
5028051	1	1	Adaptor	UNF 9/16 -18 JIC 37° female 90°

© 2025 Jost