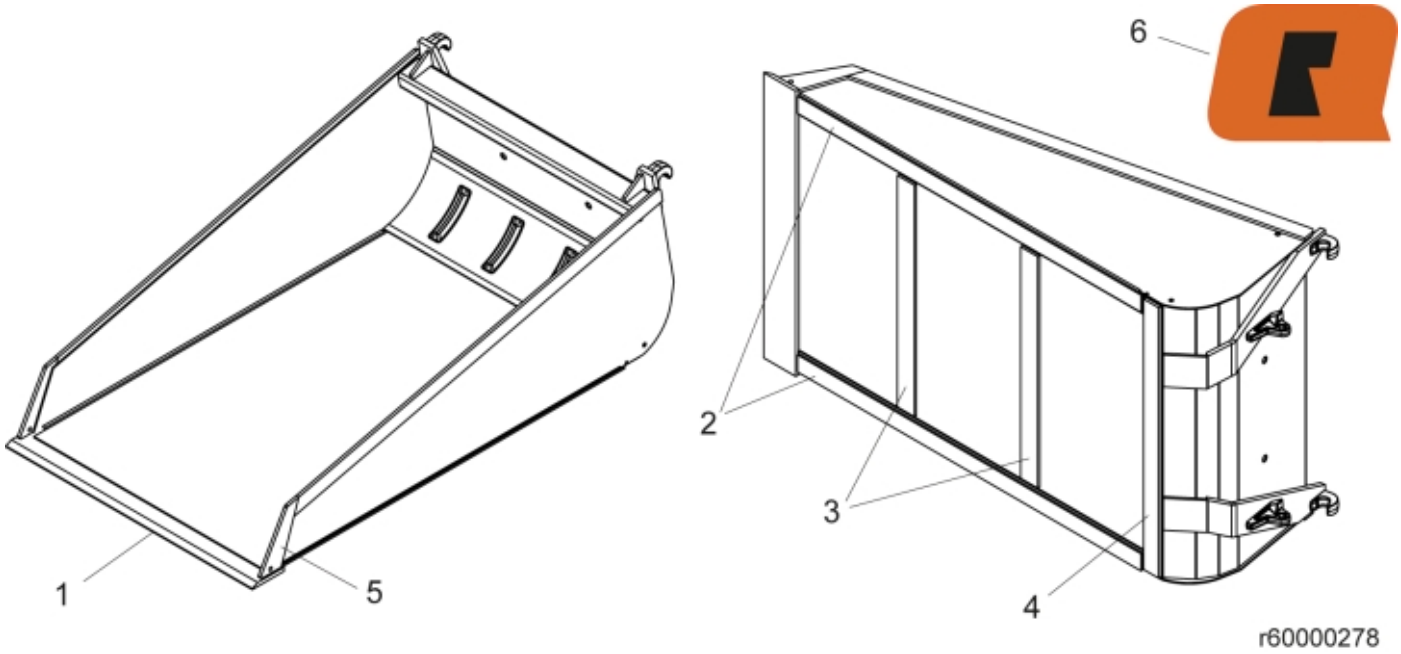

© 2025 Jost

Part assemblies	Precision Bucket 200PS Euro
Specification	Year From: 1/1/2015 12:00:00 AM

PartNo	Pos	Qty	Name	Specifications
60000273	1	1	Cutting edge	
60000330	2	2 PCS	Plate	
60000334	3	2 PCS	Plate	
11262794	4	1 PCS	Plate	
11262789	5	2 PCS	Reinforcement	
5022119		2	• Plug	
60049053	6	1	Decal	"Q" small 80x57

© 2025 Jost