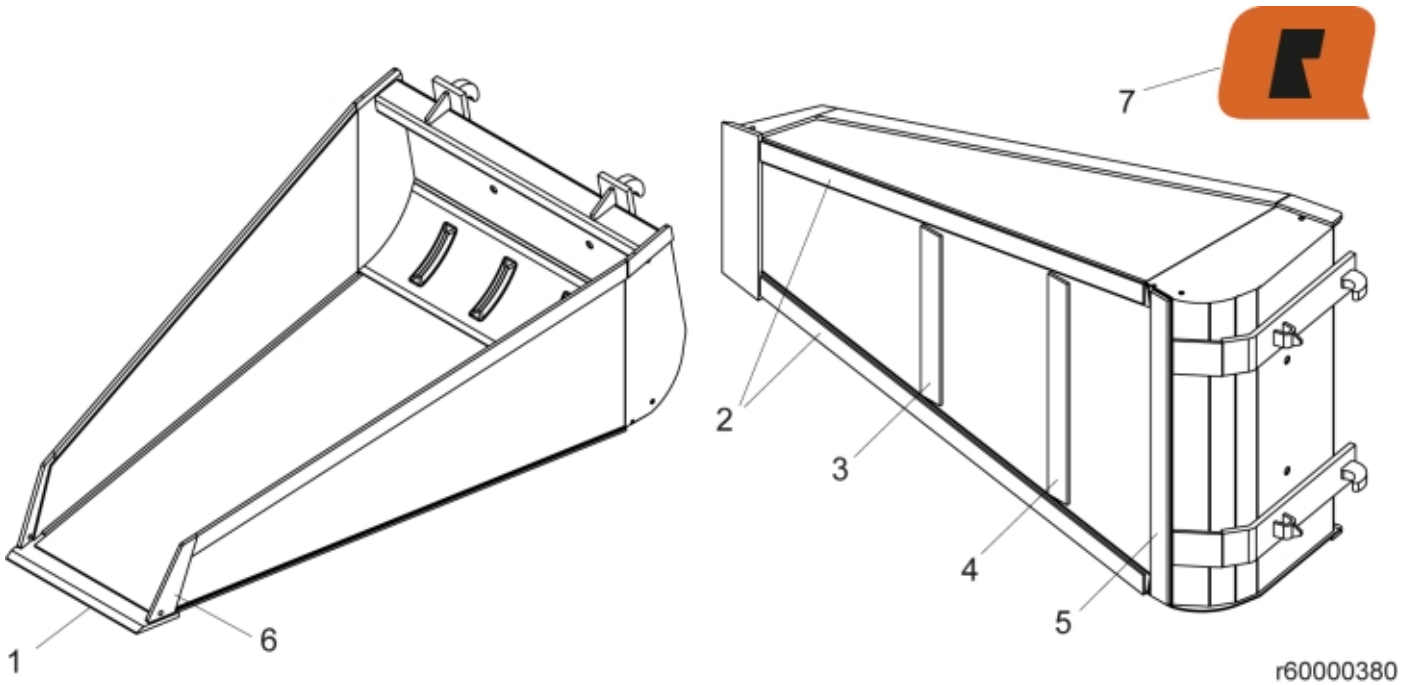

© 2025 Jost

Part assemblies	Precision Bucket 200PC SMS
Specification	Year From: 1/1/2015 12:00:00 AM

PartNo	Pos	Qty	Name	Specifications
11262787	1	1	Cutting edge	
11262792	2	2 PCS	Plate	
11262796	3	1 PCS	Plate	
11262795	4	1 PCS	Plate	
11262794	5	1 PCS	Plate	
11262789	6	2 PCS	Reinforcement	
60049053	7	1	Decal	"Q" small 80x57
5022119		2	• Plug	

© 2025 Jost