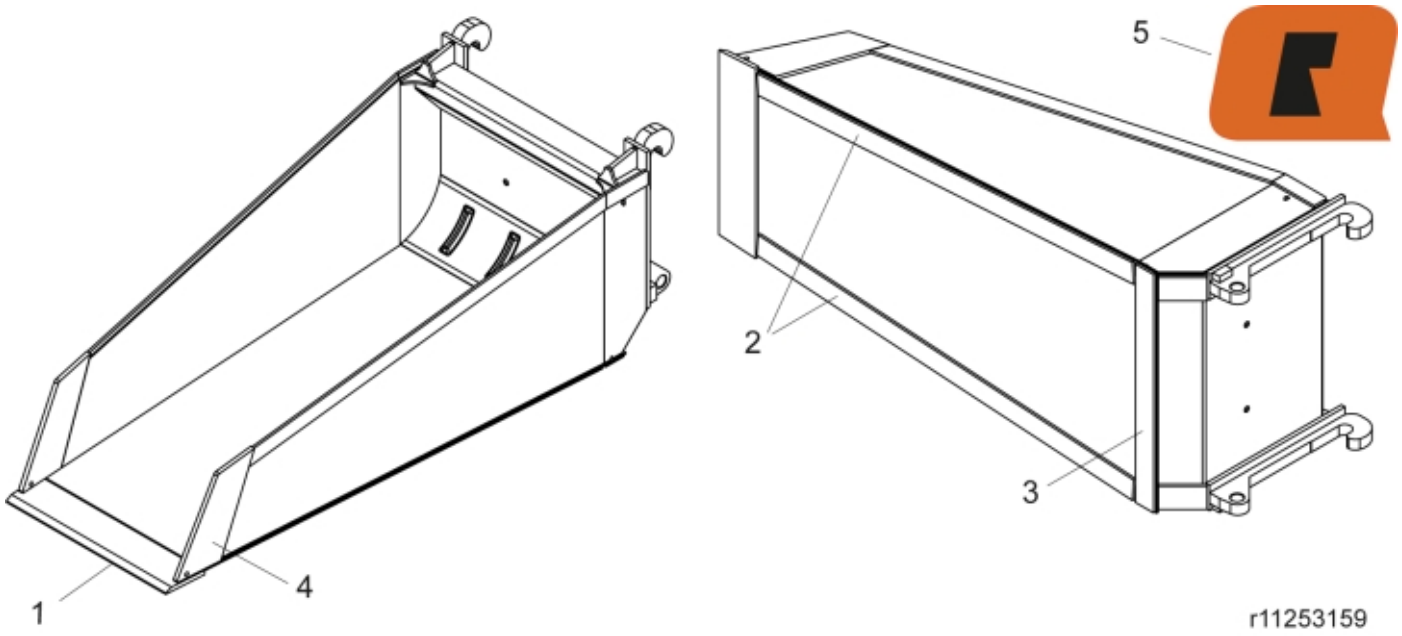

© 2025 Jost

Part assemblies	Precision bucket 250PC BM Large
Specification	Year From: 1/1/2015 12:00:00 AM

PartNo	Pos	Qty	Name	Specifications
11262812	1	1	Cutting edge	
11262823	2	2 PCS	Plate	
11262822	3	1 PCS	Plate	
11262813	4	2 PCS	Reinforcement	
5022119		2	Plug	
60049053	5	1	Decal	"Q" small 80x57

© 2025 Jost