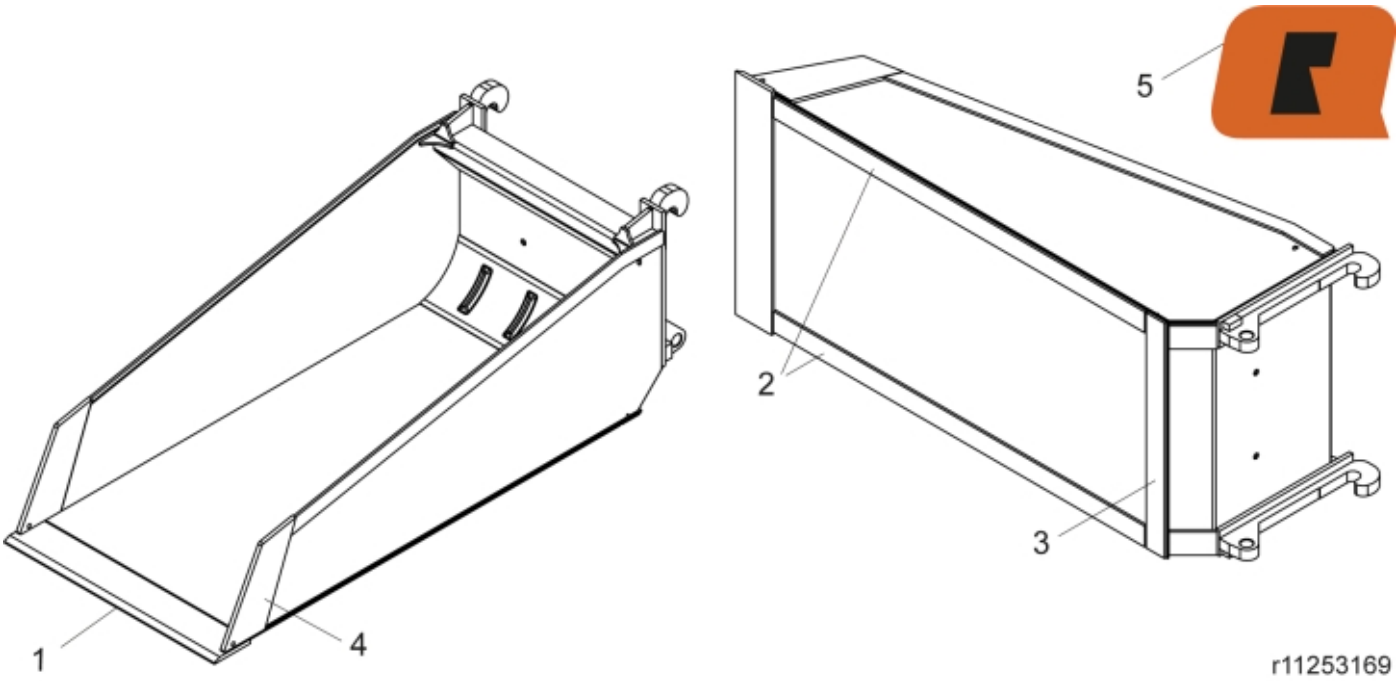

© 2025 Jost

Part assemblies	Precision Bucket 250PS BM Large
Specification	Year From: 1/1/2015 12:00:00 AM

PartNo	Pos	Qty	Name	Specifications
11262831	1	1	Cutting edge	
11262823	2	2 PCS	Plate	
11262822	3	1 PCS	Plate	
11262813	4	2 PCS	Reinforcement	
60049053	5	2	Decal	"Q" small 80x57
5022119		2	Plug	

© 2025 Jost