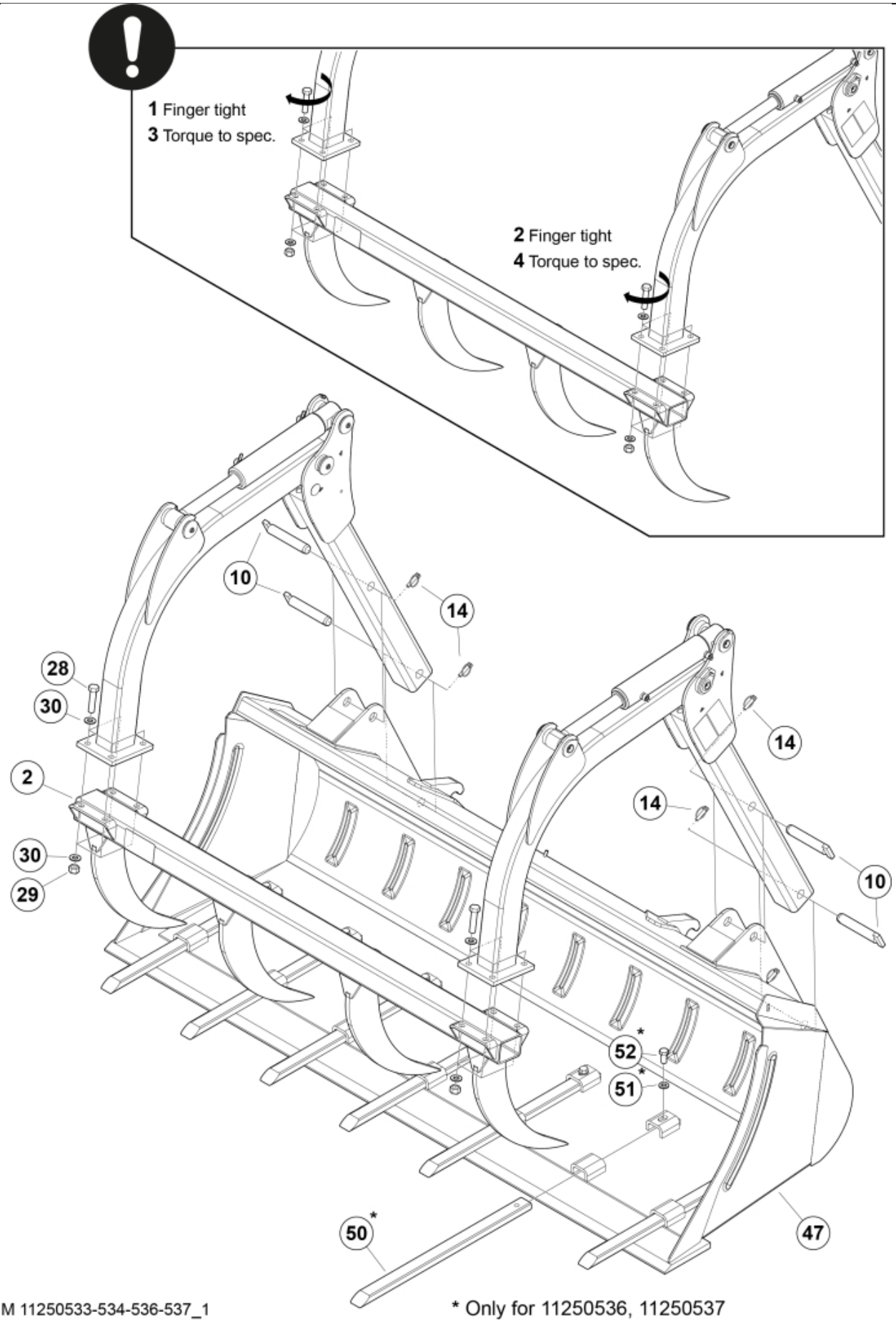

M 11250533-534-536-537_1

* Only for 11250536, 11250537

© 2025 Jost

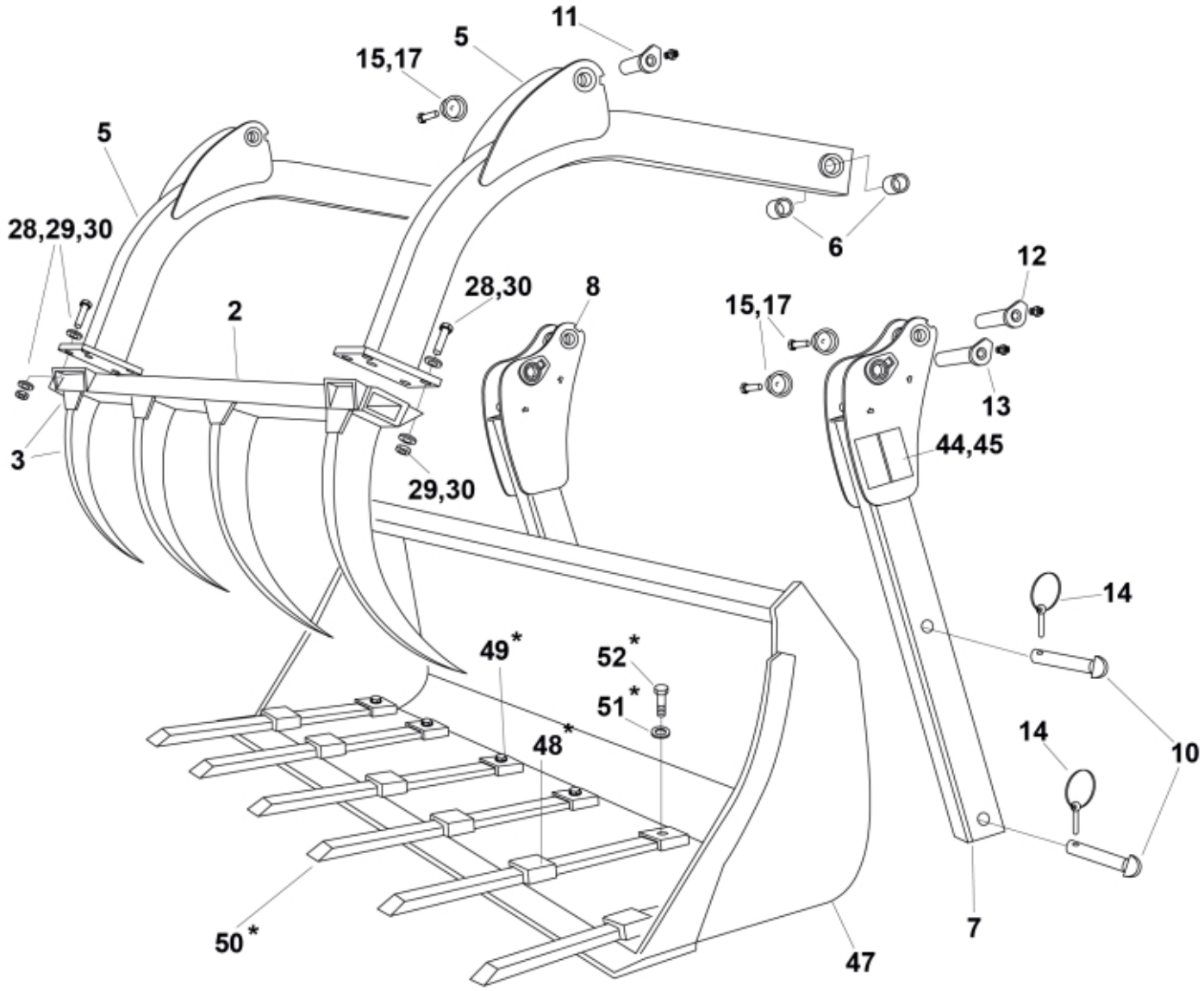

M 11250533-11250538_2

* Only for 11250536, 11250537, 11250538

© 2025 Jost

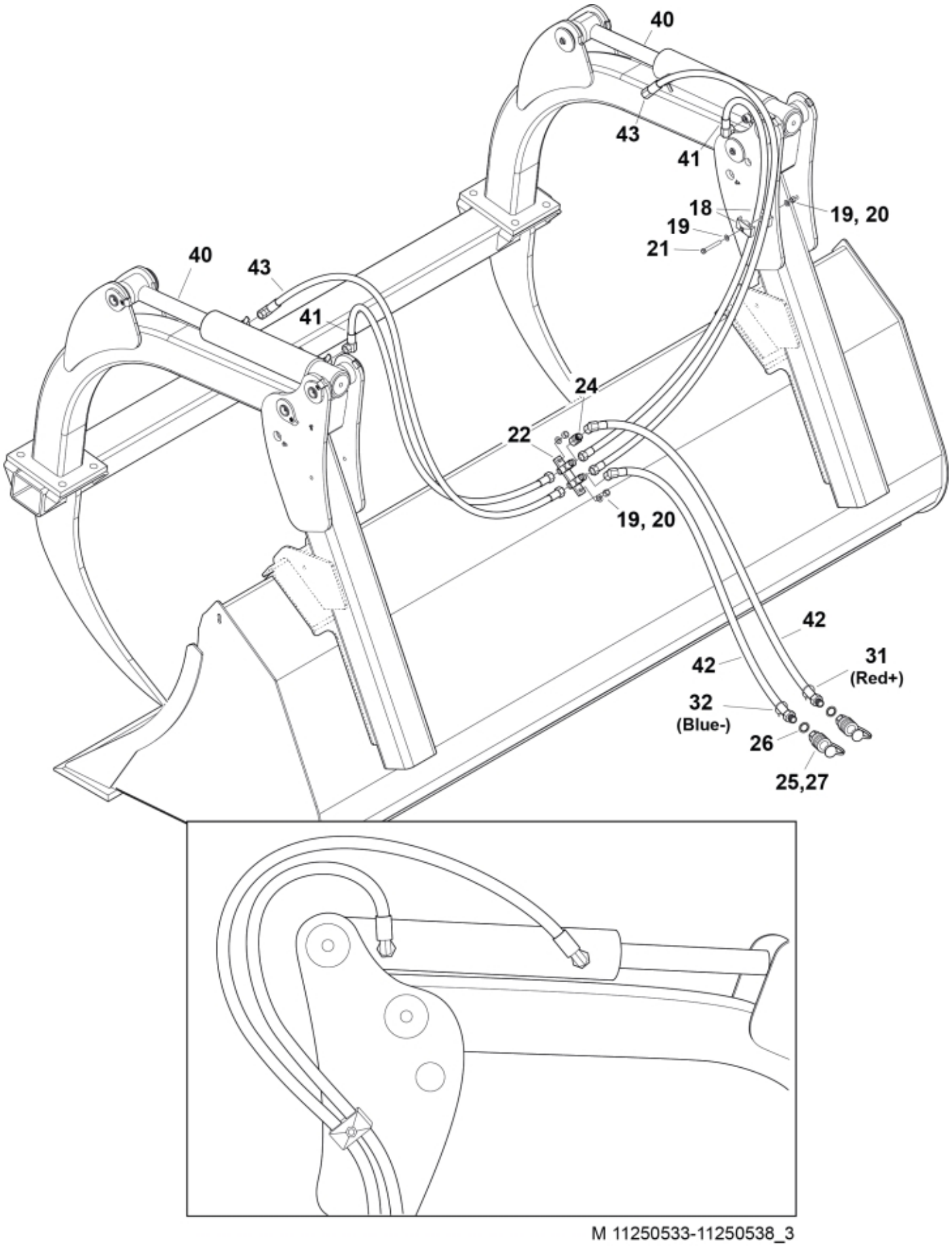

M 11250533-11250538_3

© 2025 Jost

Part assemblies	Maxi Grapple 210T MK2
Specification	Year From: 1/1/2005 12:00:00 AM

PartNo	Pos	Qty	Name	Specifications
11250536		1 PCS	Maxi Grapple 210T MK2	1/1/2005 12:00:00 AM
11260645	2	1 PCS	Claw Beam	
11261280	3	4 PCS	• Claw	Weld-on
11260653		1 PCS	•• Support plate	
11260646		1 PCS	•• Claw	
11260643	5	2 PCS	Beam	
5018515	6	2	Bushing	D30 L=20
11260651	7	1 PCS	Arm left	
11260650	8	1 PCS	Arm right	
1116643	10	4 PCS	Pin	D=30mm
9020043	11	2	Pin	D=30mm
9020046	12	2 PCS	Pin	D=30mm
9020047	13	2	Pin	D=30mm, L=151mm
1102001	14	4	Linch pin	
5215131	15	6	Locking cover	
5050608	17	6	Screw	MC6S M10x20 Loc
5016968	18	2	Hose clamp	
5013101	19	6	Washer	BRB 8,4 x 16
5011553	20	4	Nut	M6M M8 Loc-king
5002059	21	2	Screw	M6S 8x60
10834151	22	1 PCS	T-Adapter	
5028260	24	1 PCS	Adaptor	3/8" (5027934)
5044127	25	2	Quick Coupling	1/2", Part is included in kit 60007907 Hose cpl., 9032177 Hose cpl.
5013853	26	2	Dowty washer	Tredo 1/2", Part is included in kit 60007907 Hose cpl., 9032177 Hose cpl.
5044130	27	2	Dust Cover	Part is included in kit 60007907 Hose cpl., 9032177 Hose cpl.
5002154	28	8	Screw	M6S 16 x 50 (8.8)
5011557	29	8	Nut	Loc-King M16
5013105	30	16	Washer	BRB 17 x 30 x 3 300HV
5022177	31	1	Cable tie	Red
5022179	32	1	Cable tie	Blue
60110585-1	40	2	Cylinder	Glossy Black
60055521	41	2 PCS	Hose	3/8" L=1750mm
9032352	42	2 PCS	Hose	3/8" L=599mm
60055520	43	2 PCS	Hose	3/8" L=2050mm
11260118	47	1 PCS	Grapple Bucket 210T	
5022119		2	• Plug	
10834138	48	1 PCS	• Bracket	
10834147	49	1 PCS	• Bracket	
10834142-17		6 PCS	Tine cpl.	
10834140	50	1 PCS	• Tine	
5013105	51	1	• Washer	BRB 17 x 30 x 3 300HV
5002151	52	1	• Screw	M6S_ M16 x 35 (8.8)
1123673	44	1	Warning decal	
11136459	44	1	Warning decal	Only for North Am. Warning triangle
1123674	45	1	Warning decal	"Read manual"

© 2025 Jost