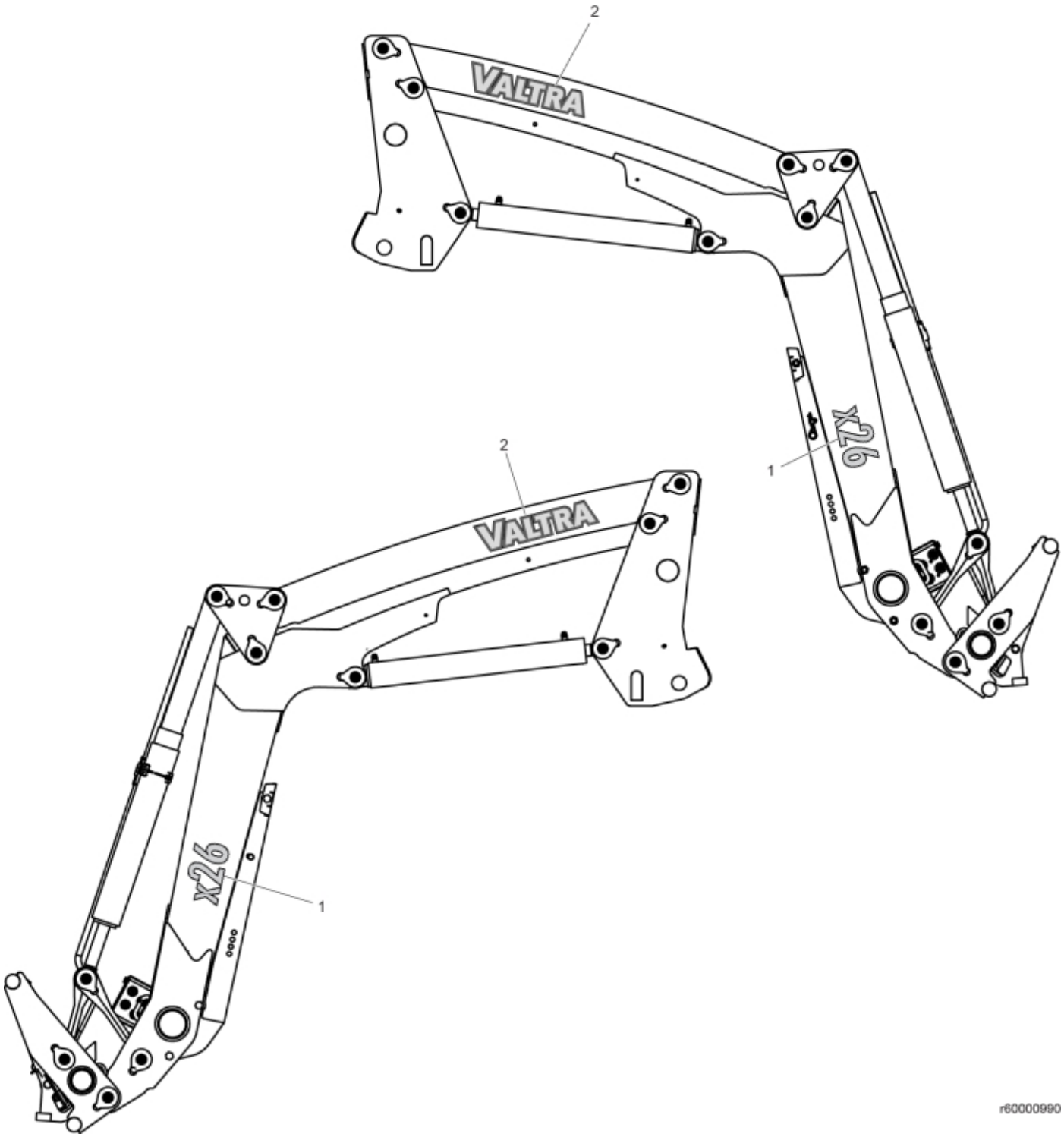

© 2025 Jost

Part assemblies	Decal kit X26

PartNo	Pos	Qty	Name	Specifications
60000902	1	2 PCS	Decal, Model	
11133937	2	2	Decal, Brand	

© 2025 Jost