r11250655_11260120

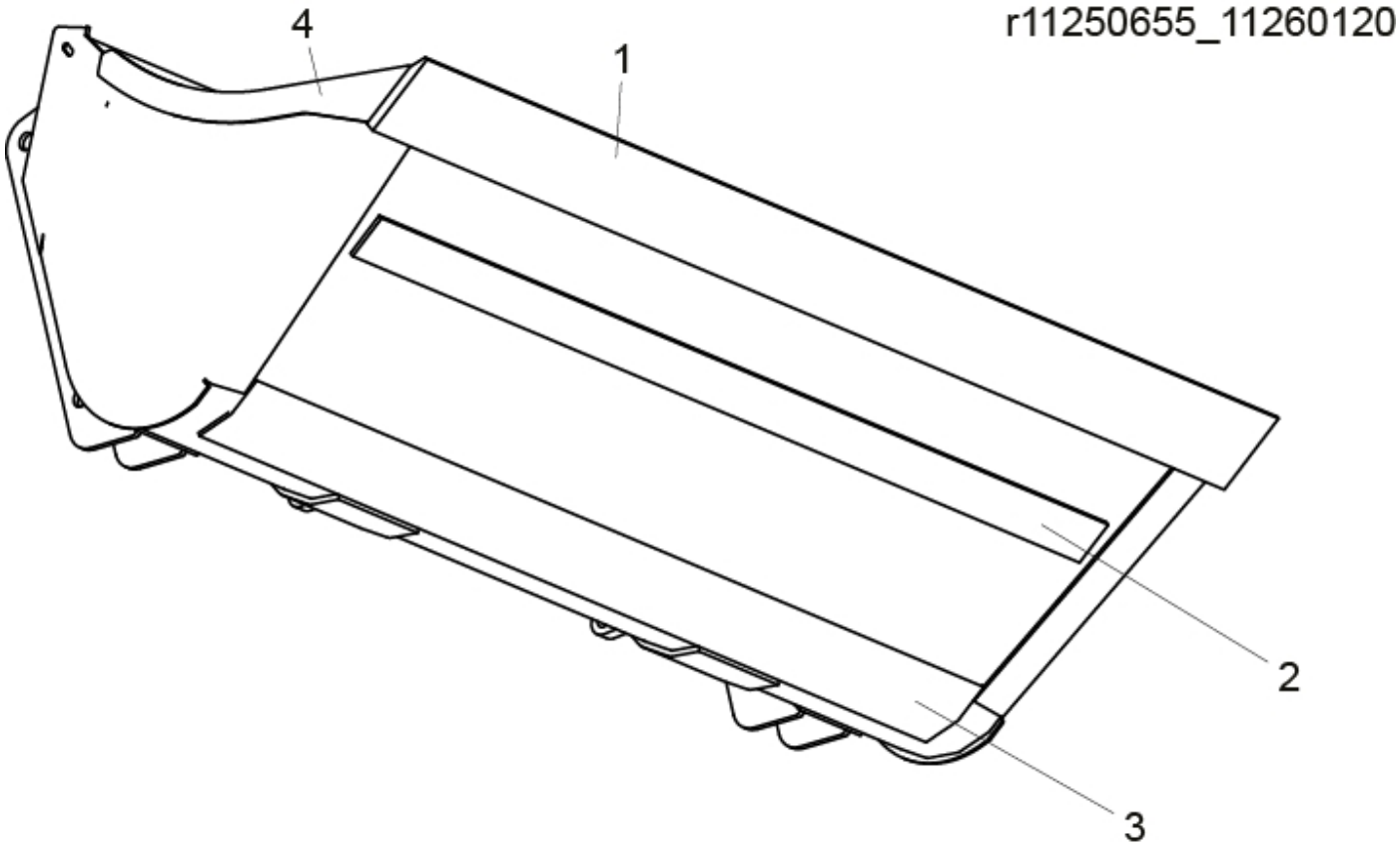

© 2025 Jost

Part assemblies Grapple Bucket 240

PartNo	Pos	Qty	Name	Specifications
11260042	1	1	Cutting edge	L=2450
11260052	2	1 PCS	Wearing strip	
11260088	3	1 PCS	Wearing strip	
11260096	4	2 PCS	Wearing strip	
5022119		2	Plug	

© 2025 Jost