r11250656_11260122

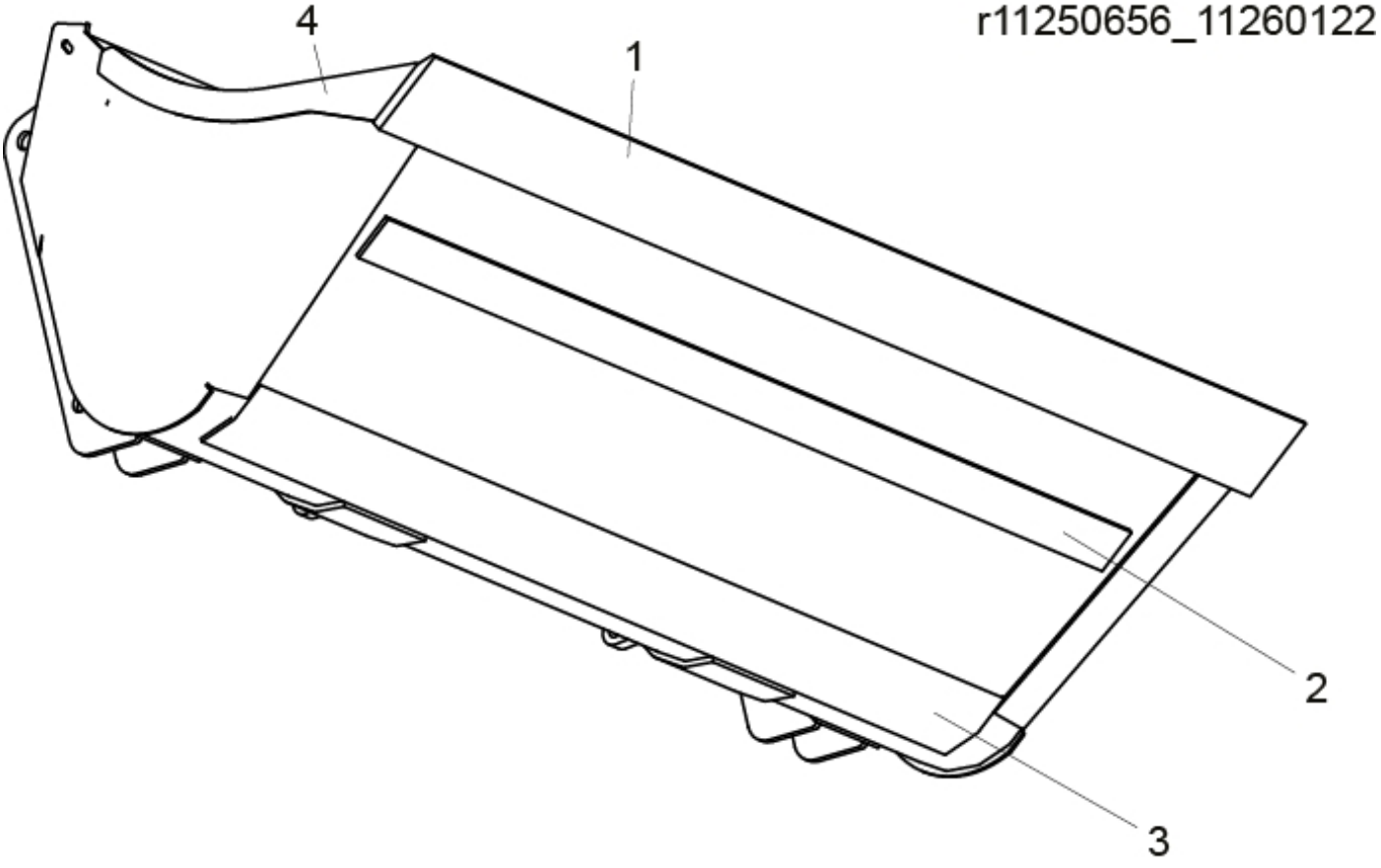



© 2025 Jost

**Part assemblies** Grapple Bucket 260T

| PartNo | Pos | Qty | Name | Specifications |
|---|---|---|---|---|
| 11260044 | 1 | 1 | Cutting edge | L=2650 |
| 11260053 | 2 | 1 PCS | Wearing strip | |
| 11260089 | 3 | 1 PCS | Wearing strip | |
| 11260096 | 4 | 2 PCS | Wearing strip | |
| 5022119 | | 2 | Plug | |


© 2025 Jost