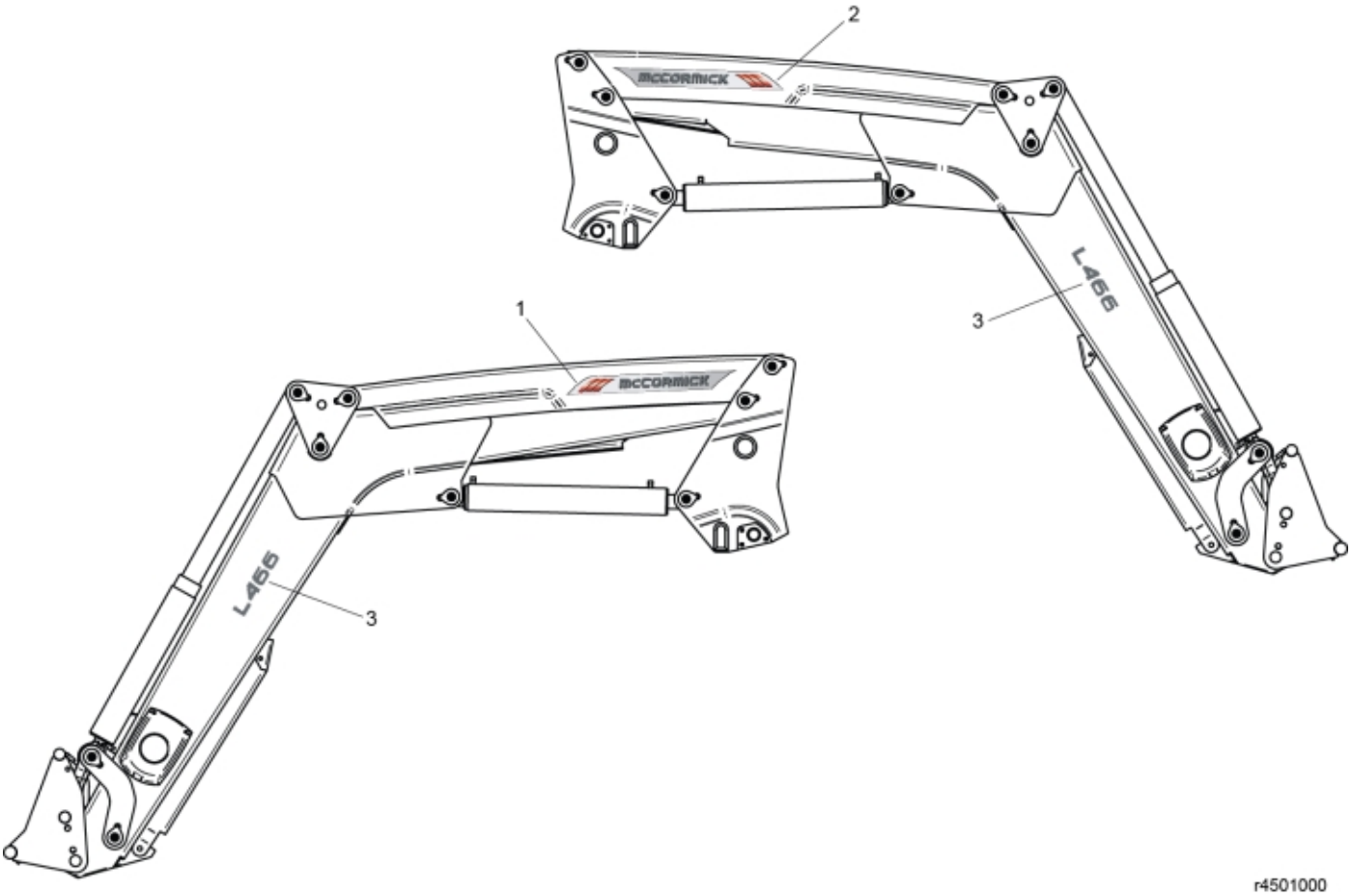

© 2025 Jost

Part assemblies Decal kit L466

PartNo	Pos	Qty	Name	Specifications
11137331	1	1 PCS	Decal Brand, LH	
11137332	2	1 PCS	Decal Brand, RH	
11137246	3	2 PCS	Decal, Model	L466

© 2025 Jost