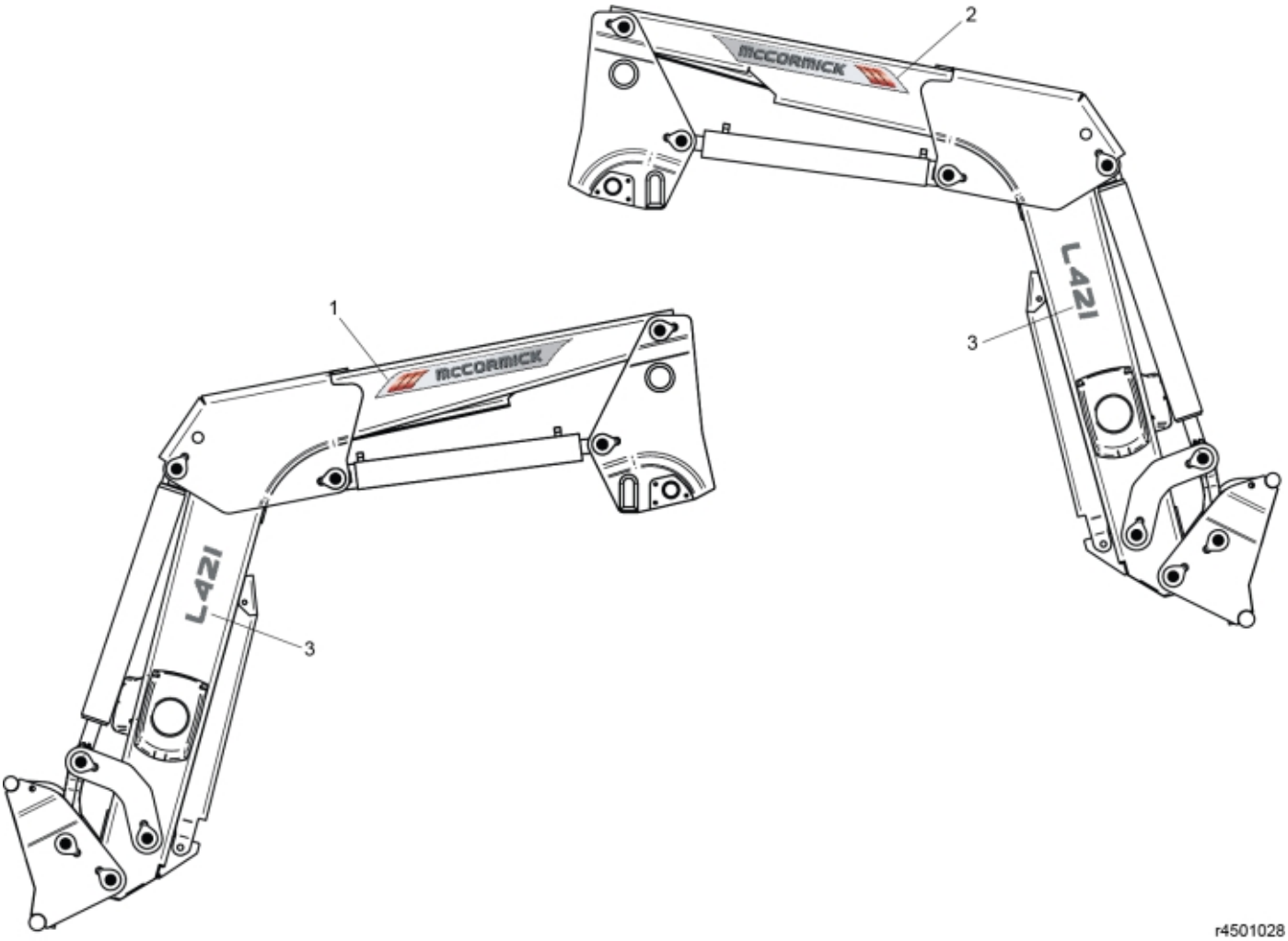

r4501028

© 2025 Jost

Part assemblies Decal kit L421

PartNo	Pos	Qty	Name	Specifications
11137323	1	1 PCS	Decal Brand, LH	
11137330	2	1 PCS	Decal Brand, RH	
11137428	3	2 PCS	Decal, Model	L421

© 2025 Jost