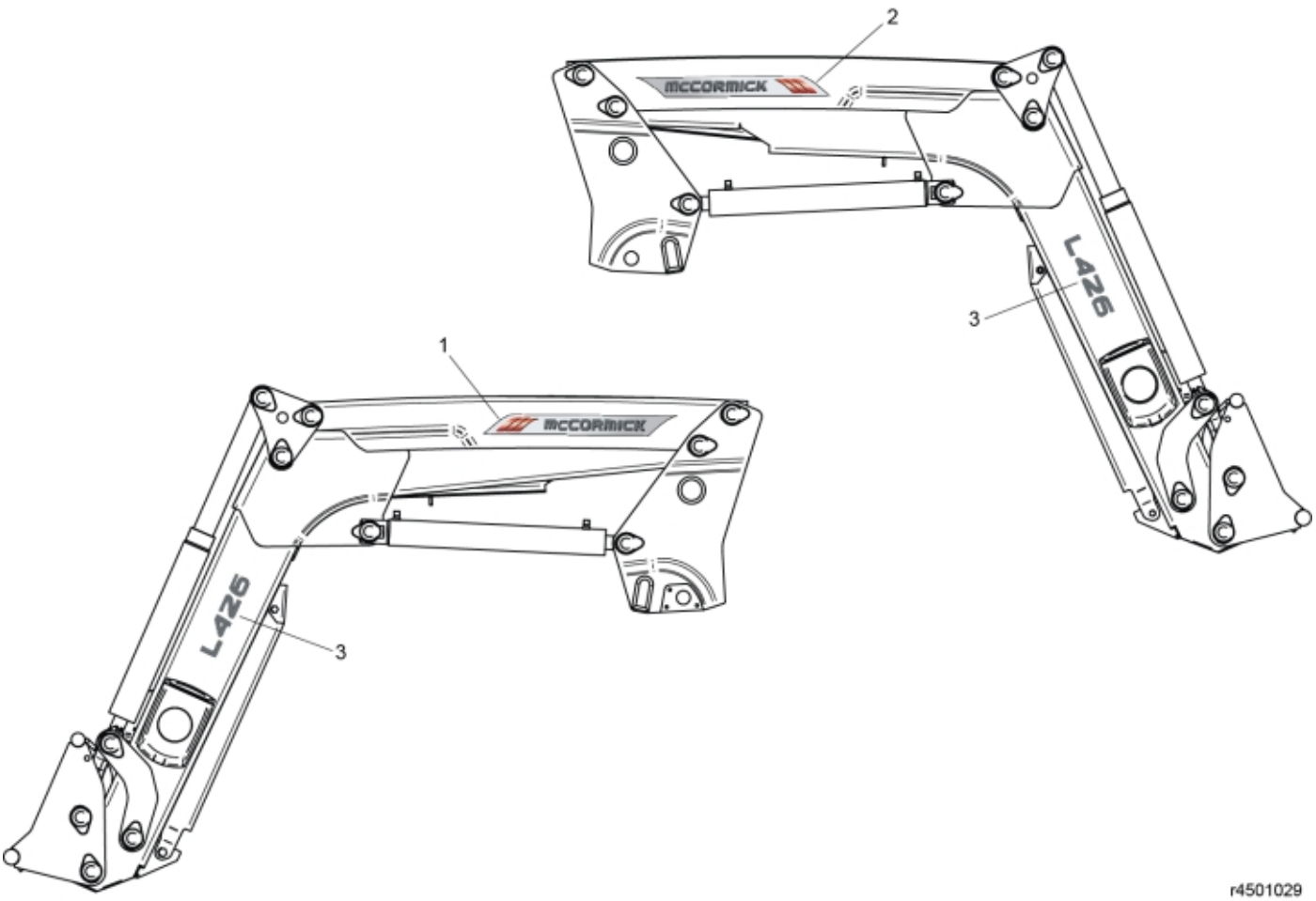

© 2025 Jost

Part assemblies Decal kit L426

PartNo	Pos	Qty	Name	Specifications
11137323	1	1 PCS	Decal Brand, LH	
11137330	2	1 PCS	Decal Brand, RH	
11137442	3	2 PCS	Decal, Model	L426

© 2025 Jost