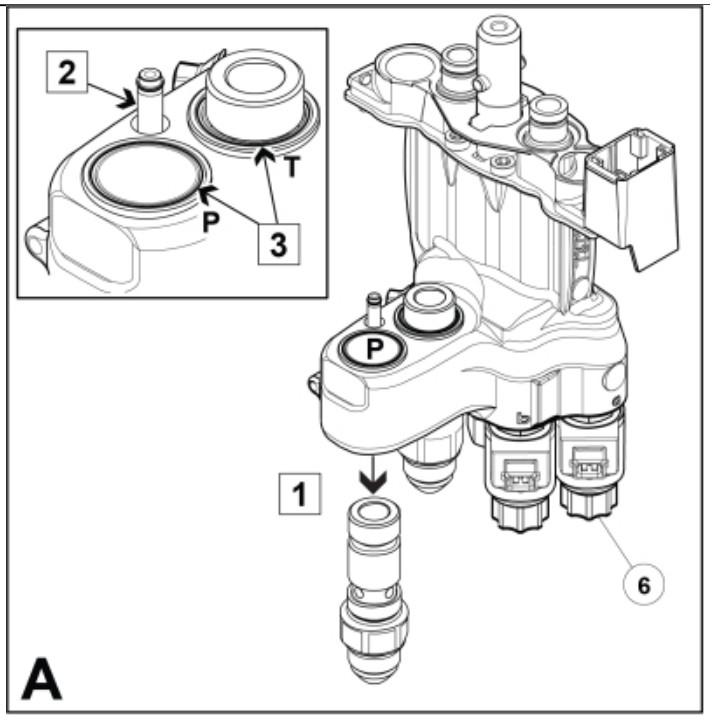

M 5034284-1

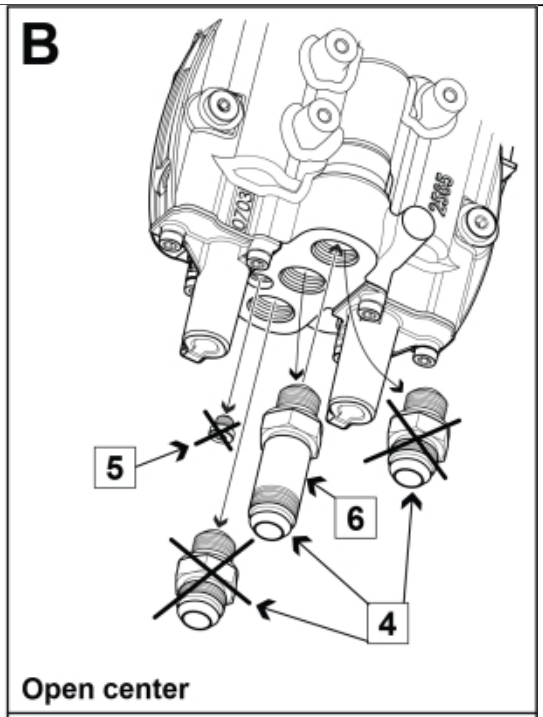

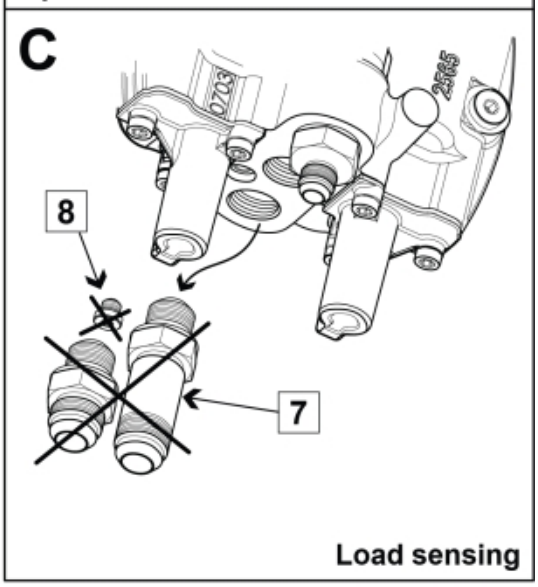

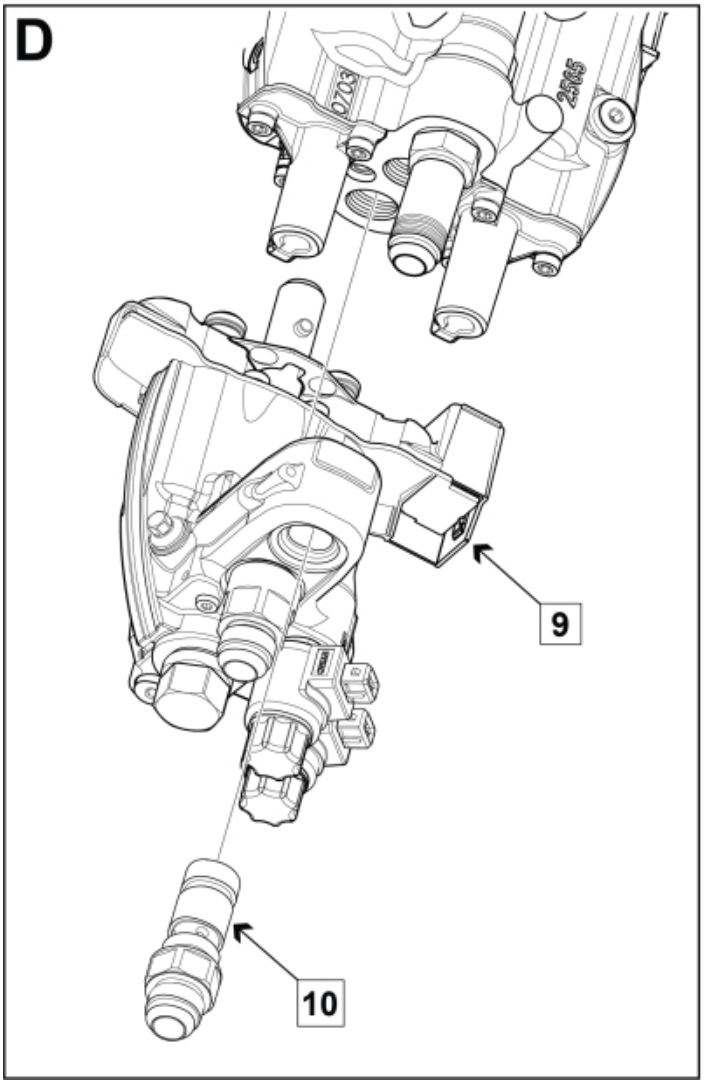

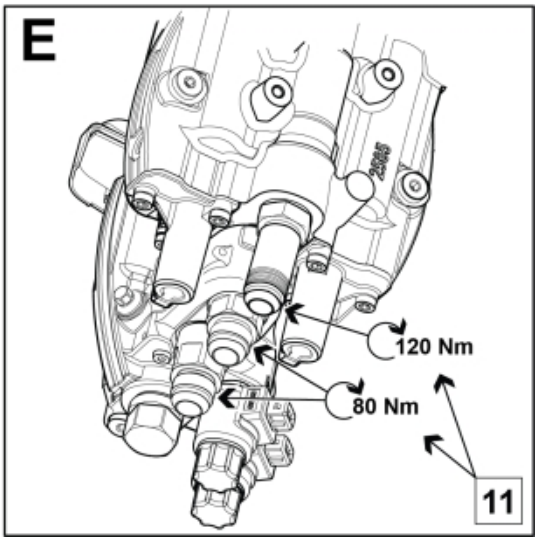

© 2025 Jost

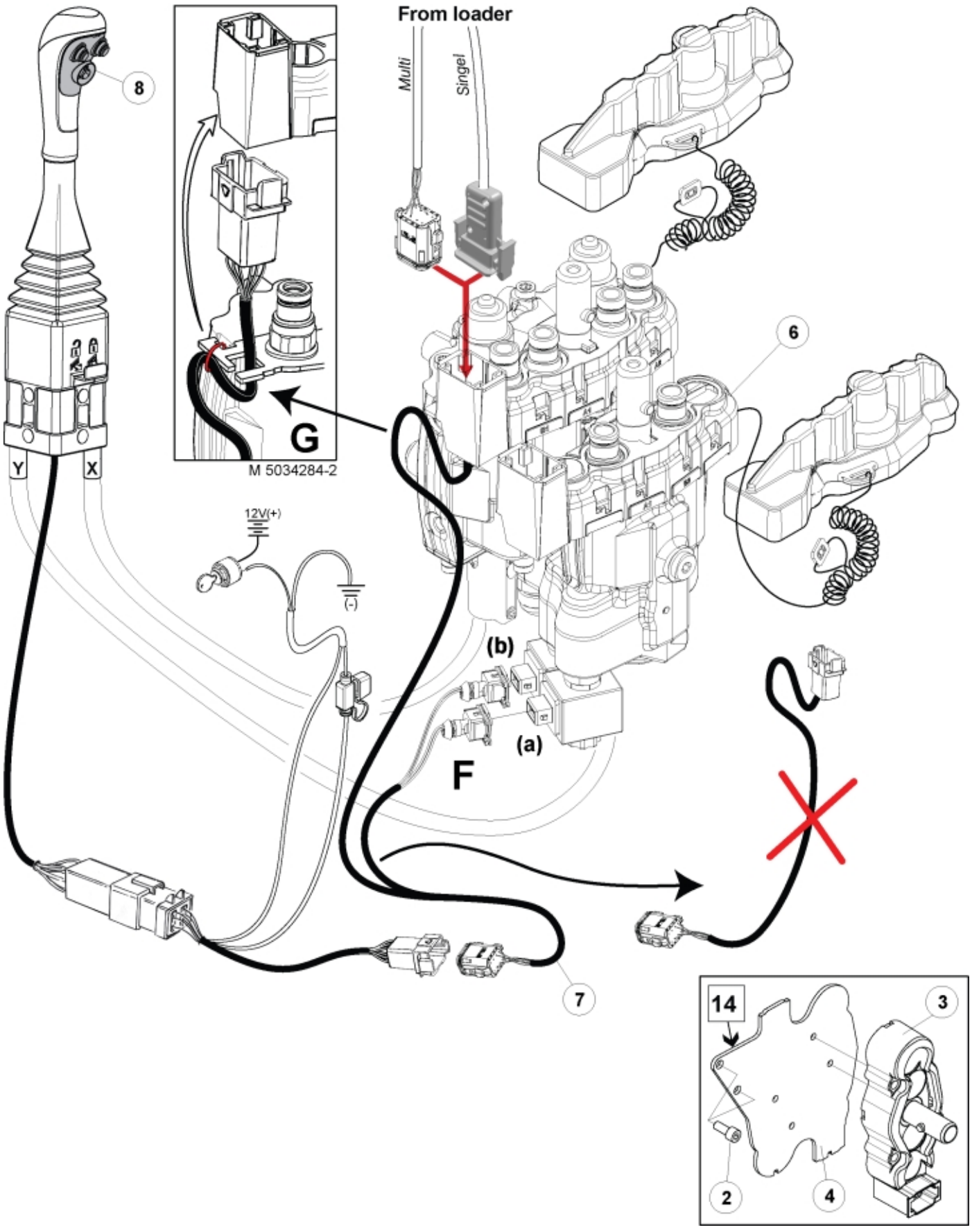

© 2025 Jost

Description	Grey
Part assemblies	Live3 Ergo AS Kit
Specification	Specification: Grey

PartNo	Pos	Qty	Name	Specifications
5034284-18			Live3 Ergo AS Kit	Grey
5004061	2	2	Screw	MC6S M8x20
5034234	3	1	Parking support kit	Replaces 5034233, 5033972
5034236-18	4	1 PCS	Bracket	Grey
10570171-18	6	1 PCS	Valve Live3 M. P. R LS/OC	Grey
5102239	7	1 PCS	Harness	
5021959		1 PCS	Switch cpl.	
5021958	8	1	• Insert	3 switches
5033621	9	5	• Cable tie	4.6x150

© 2025 Jost