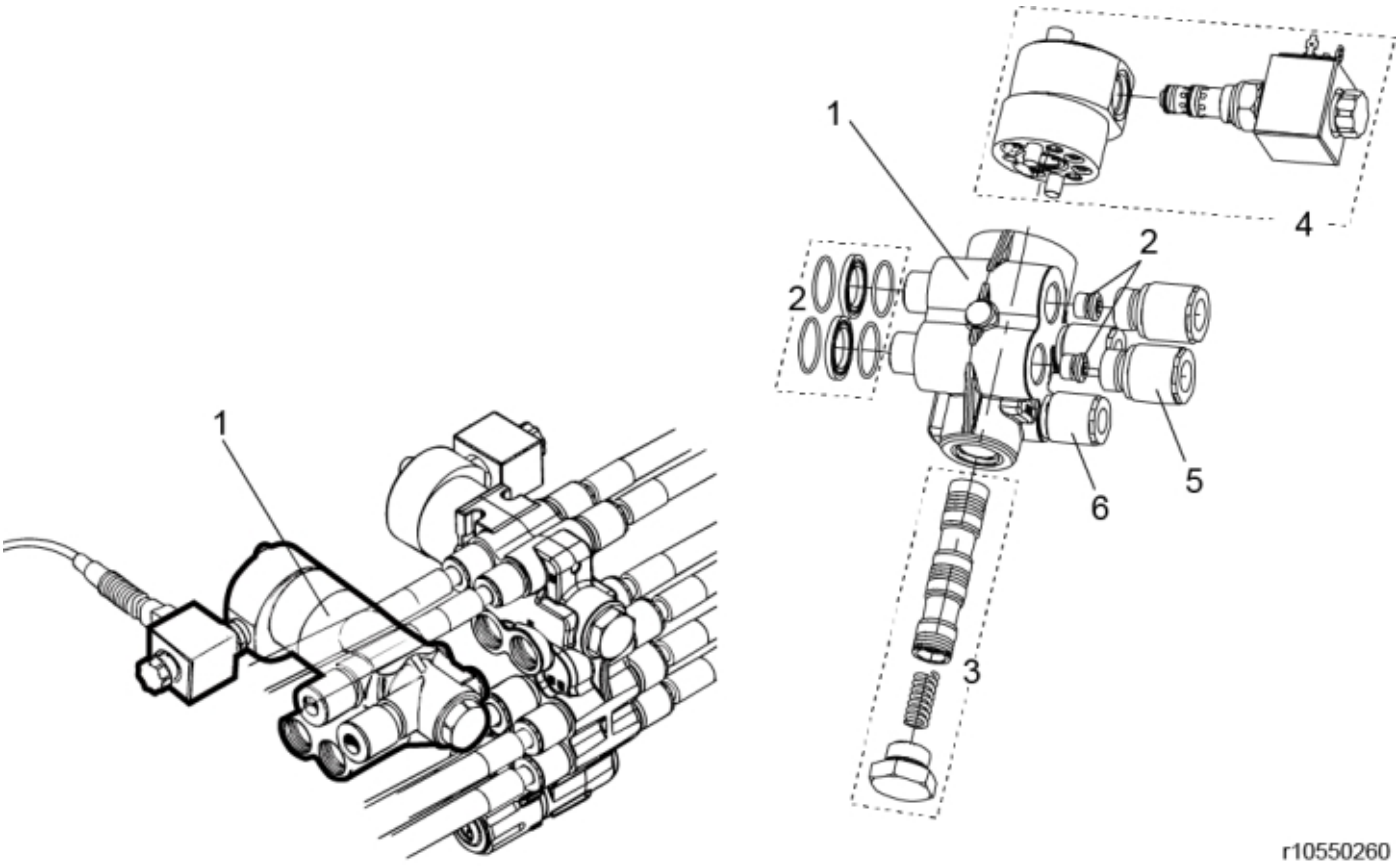

© 2025 Jost

Part assemblies Diverter valve

PartNo	Pos	Qty	Name	Specifications
10550260	1	1 PCS	Diverter valve	
10550328	2	1 PCS	Sealing Set	
10550321	3	1	Spool kit	
10550265	4	1 PCS	Servo block cpl.	
9031325	5	2	Coupling	1/2"
9031324	6	2	Coupling	3/8"

© 2025 Jost