Quicke

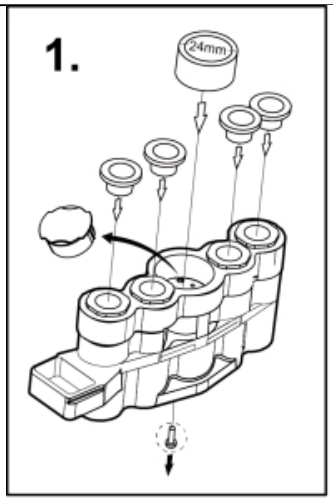

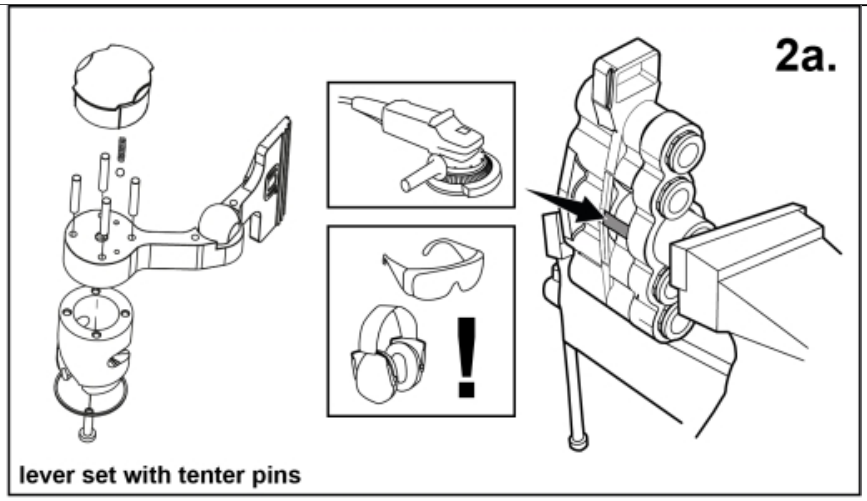

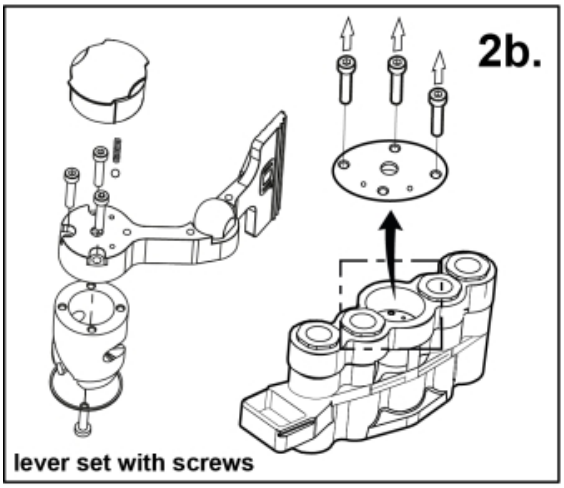

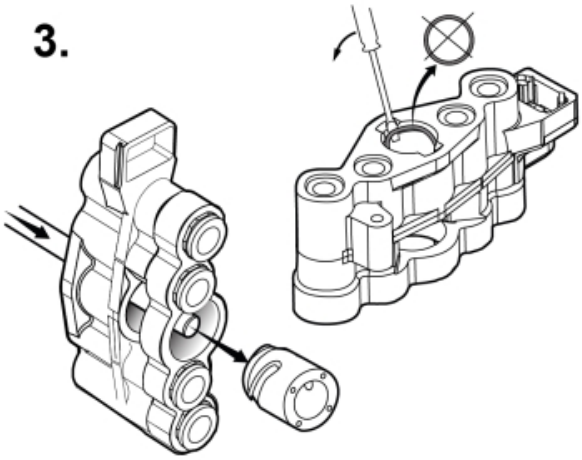

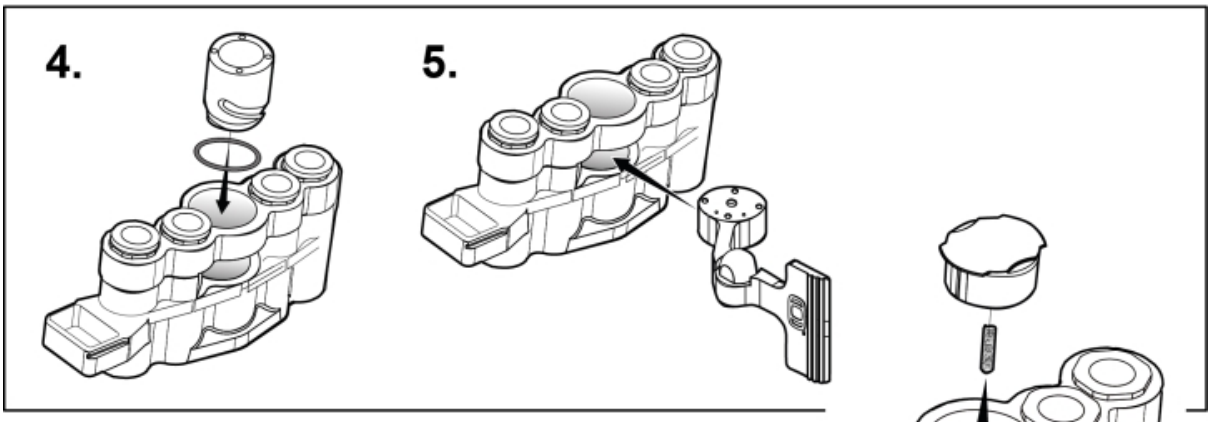

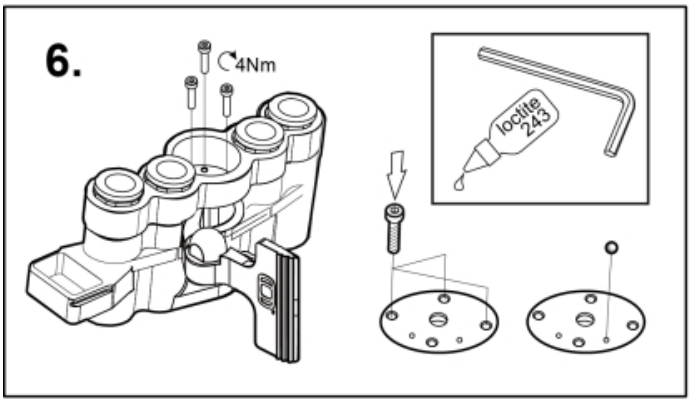

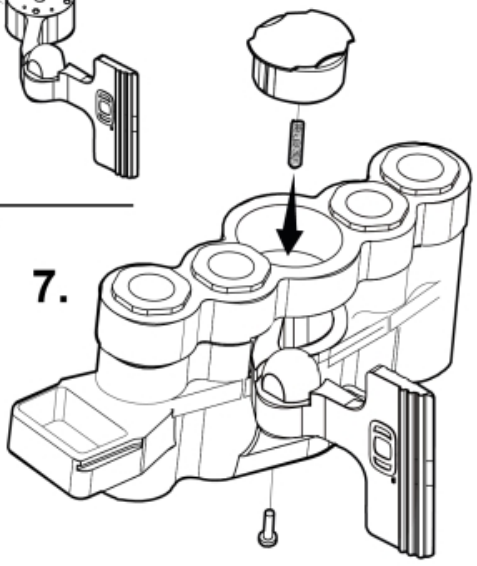

M 60004357

© 2025 Jost

Part assemblies	Lever set
Specification	Specification: replaces 5044965

PartNo	Pos	Qty	Name	Specifications
60004357	1	1	Lever set	replaces 5044965

© 2025 Jost