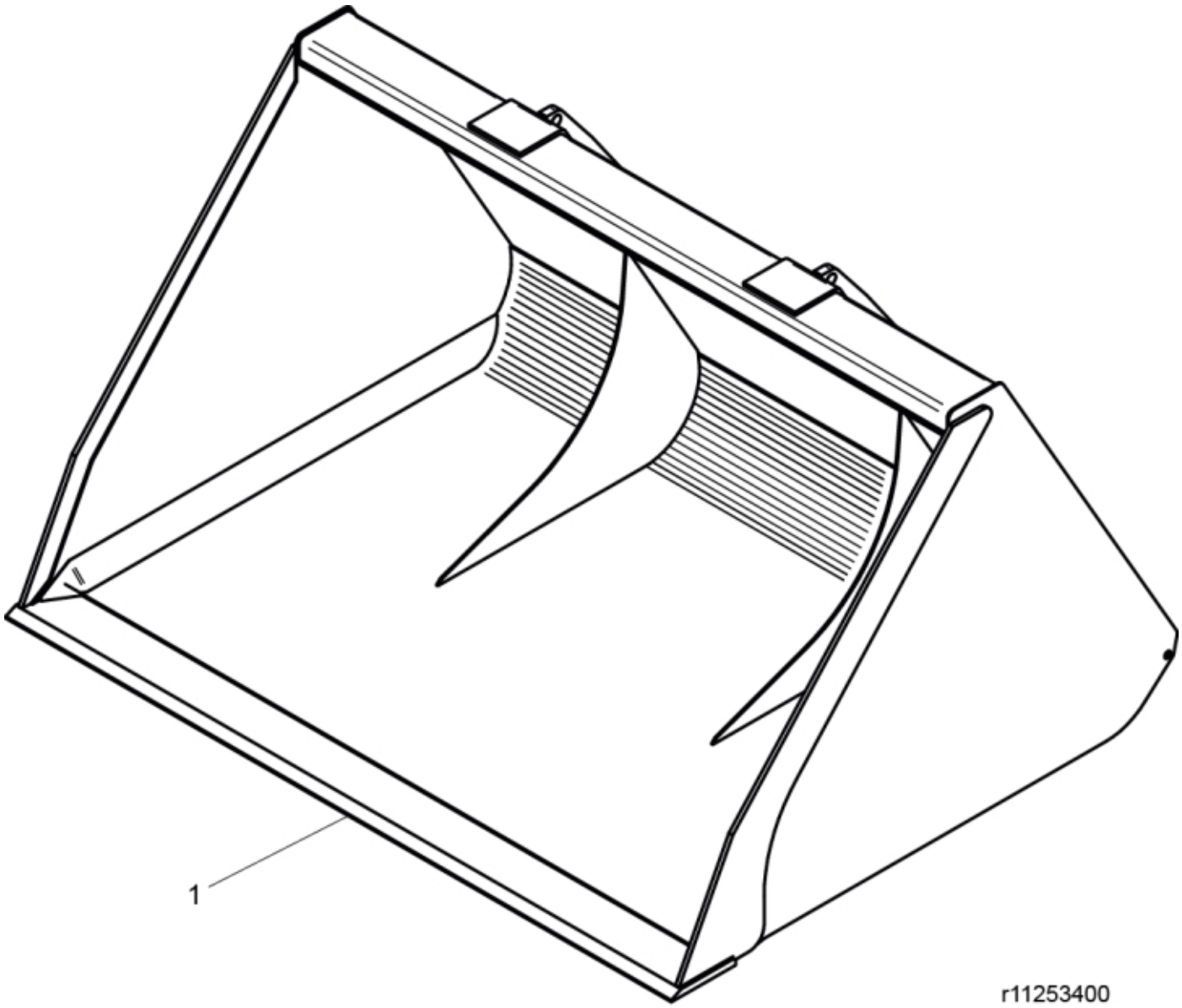



© 2025 Jost

| | |
|---|---|
| **Part assemblies** | XV Bucket 43,26 Merlo |
| **Specification** | Year From: 1/1/2015 12:00:00 AM |
| | Year To: 7/31/2018 12:00:00 AM |

| PartNo | Pos | Qty | Name | Specifications |
|---|---|---|---|---|
| 60050055 | 1 | 1 PCS | Cutting edge | |
| 60001650 | 2 | 2 PCS | Decal | Original Implements 361,7x100 |


© 2025 Jost