A

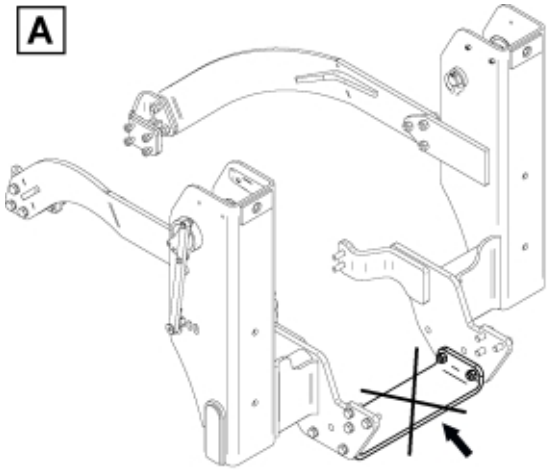

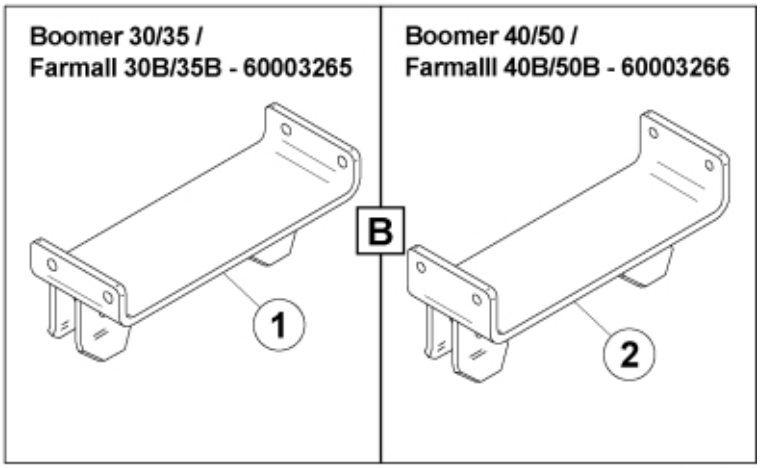

M 60003265_66

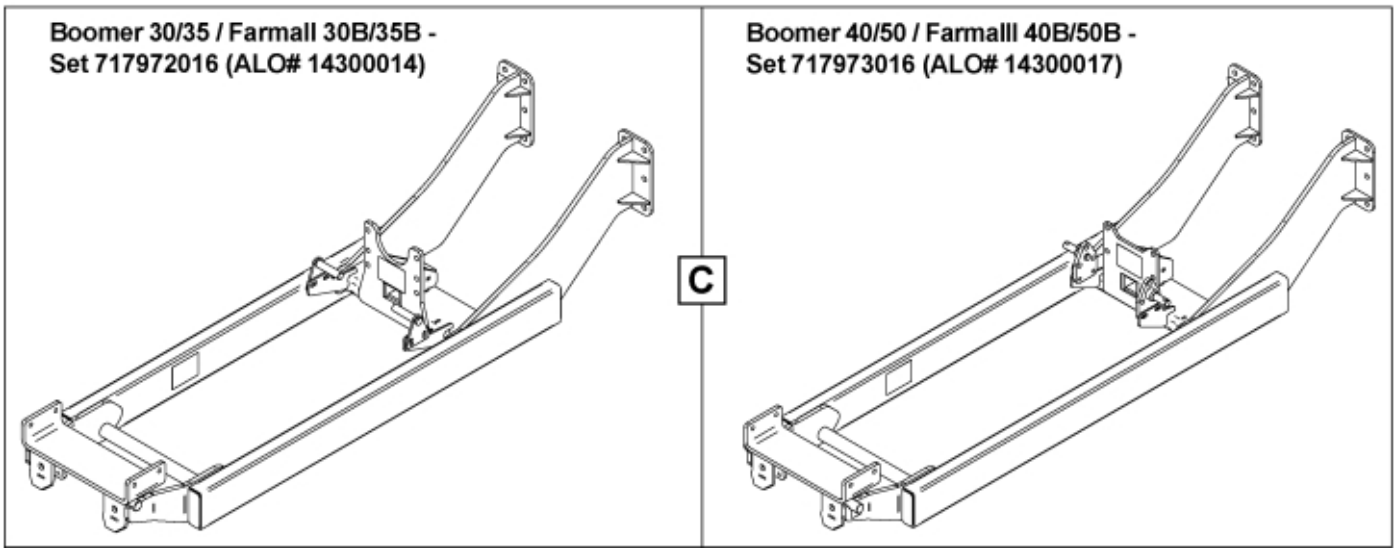

© 2025 Jost

Part assemblies	Bracket kit

PartNo	Pos	Qty	Name	Specifications
60003266		1 PCS	Bracket kit	
60001200	2	1 PCS	Cross bar	

© 2025 Jost