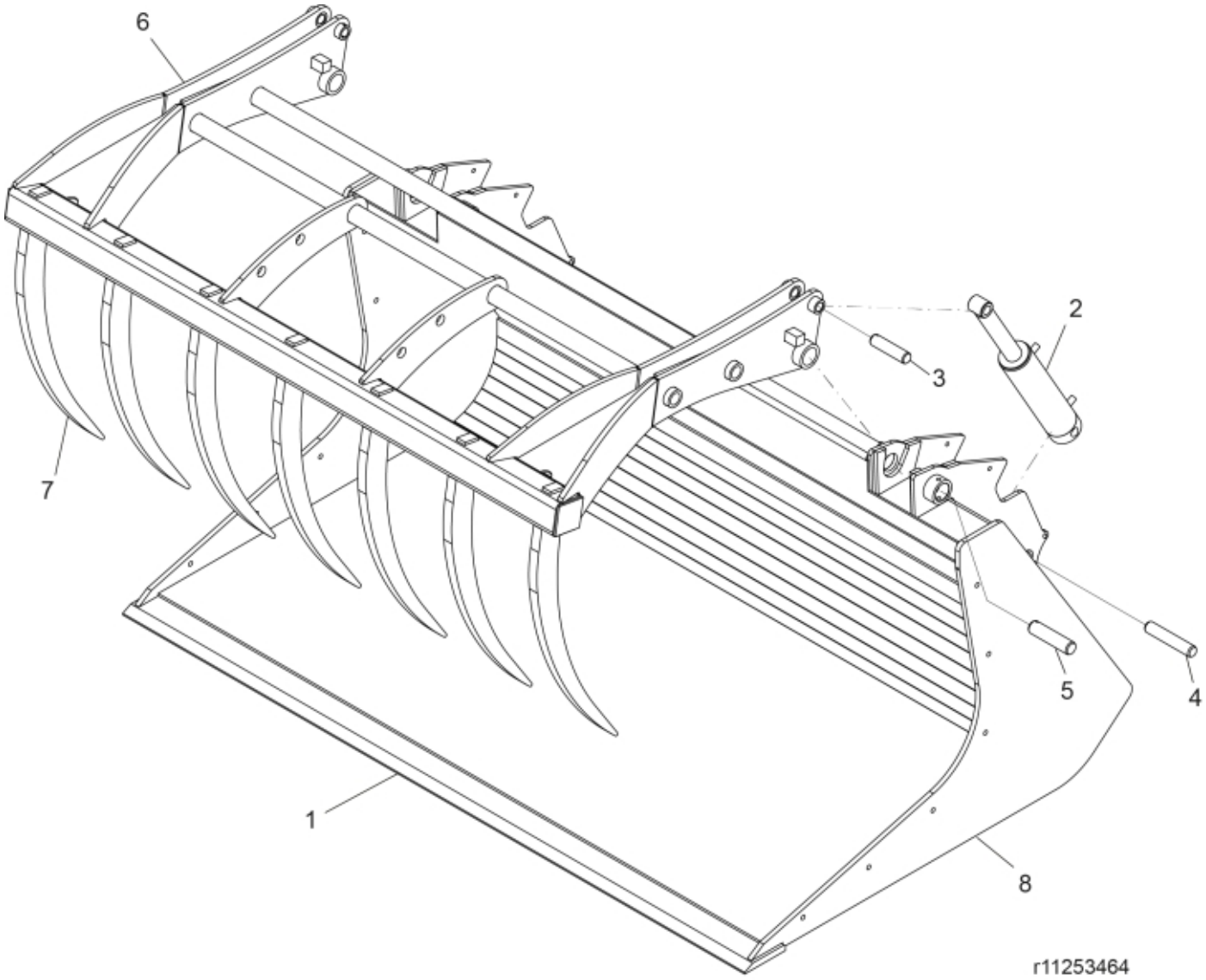



© 2025 Jost

| | |
|---|---|
| **Part assemblies** | Multibenne XL 23,24 Qfit S/N -40899 |
| **Specification** | Year From: 1/1/2015 12:00:00 AM |
| | Serial number to: 40899 |
| | Year To: 5/31/2016 12:00:00 AM |

| PartNo | Pos | Qty | Name | Specifications |
|---|---|---|---|---|
| 60050059 | 1 | 1 PCS | Cutting edge | |
| 60050079 | 2 | 2 PCS | Cylinder | |
| 60050081 | | 1 | • Seal kit | cyl. 60050079 |
| 60050073 | 3 | 2 PCS | Pin | |
| 60050071 | 4 | 2 PCS | Pin | |
| 60050083 | 5 | 2 PCS | Pin | |
| 60010581 | 6 | 1 PCS | Grab head | |
| 60050077 | 7 | 7 PCS | Tine | |
| 60050069 | 8 | 1 PCS | Bucket | Bucket Multibenne XL |
| 60004291 | 9 | 1 PCS | Decal | Multibenne XL |


© 2025 Jost