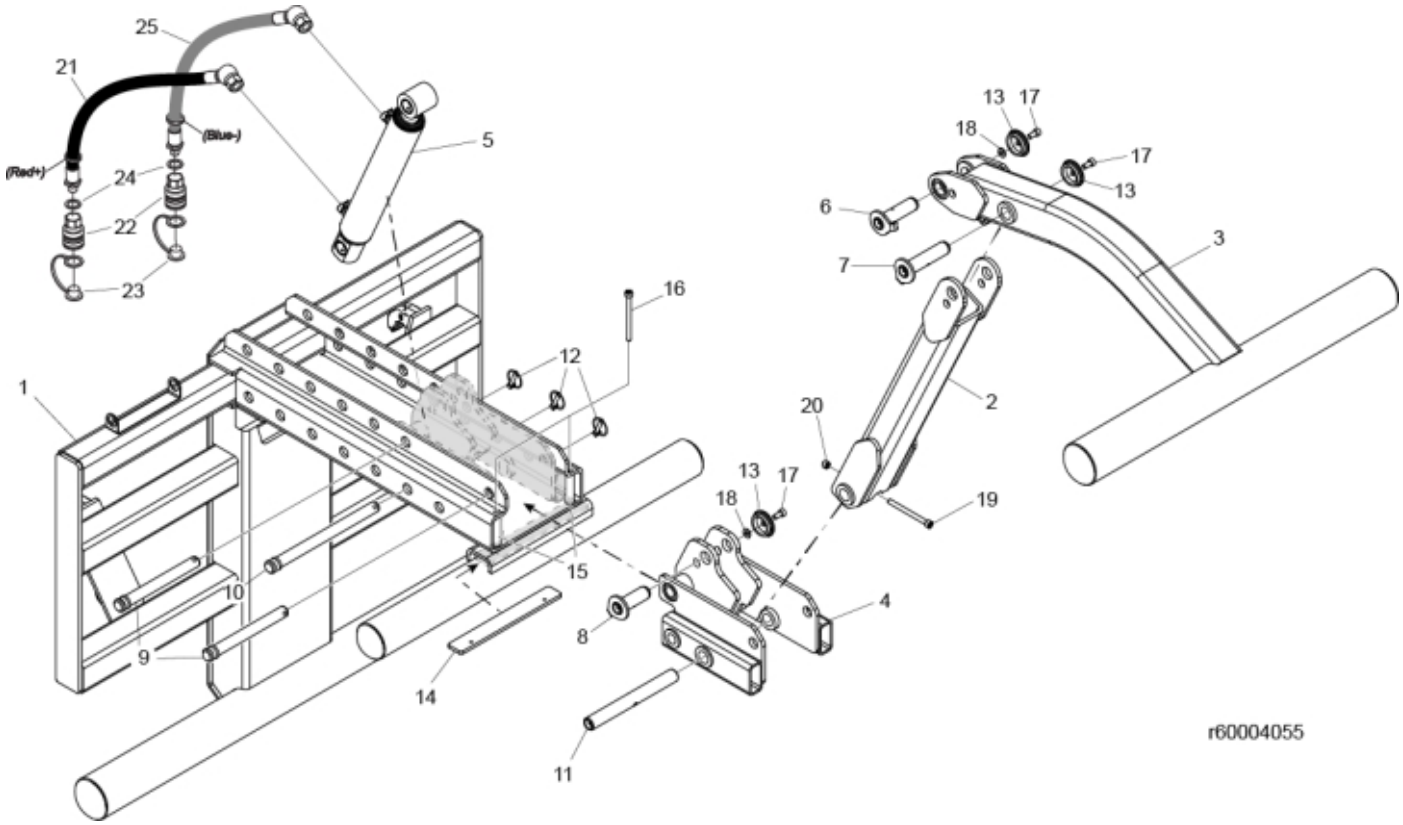
25
21
(Blue-)
(Red+)
24
22
23
5
16
12
1
10
9
15
14
11
8
4
13
17
18
20
19
2
6
7
3
r60004055

© 2025 Jost

Part assemblies	TopGrip Euro
Specification	Year From: 1/1/2015 12:00:00 AM
	Year To: 3/1/2026 12:00:00 AM

PartNo	Pos	Qty	Name	Specifications
11253358			TopGrip Euro	1/1/2015 12:00:00 AM, 3/1/2026 12:00:00 AM
60004056	1	1 PCS	Frame	
60050041	2	1 PCS	Arm	
60050046	3	1 PCS	Arm	
60050034	4	1 PCS	Guide	
60003322	5	1 PCS	Cylinder	
9020110	6	1	Pivot Pin	D=30, L=105mm
60018046	7	1	Pivot Pin	D=30, L=127mm
60018050	8	1	Pivot Pin	D=30, L=84mm
60050053	9	2	Locking Pin	
60050054	10	1	Locking Pin	
60050017	11	1 PCS	Pin	
5017002	12	3	Linch pin	
5215131	13	3	Locking cover	
60004599-22	14	1 PCS	Plate	
60004598-22	15	2 PCS	Spacer	
5050163	16	2	Screw	MC6S M10x120 (8.8)
5004917	17	3	Screw	
5013110	18	2	Washer	BRB 10.5x22x2
5004082	19	1 PCS	Screw	MC6S 10x65
5011554	20	1	Nut	Loc-King M10
60004614	21	1 PCS	Hose	3/8" L=1400 1/2GRU - 3/8G90LMC
5044127	22	2	Quick Coupling	1/2", Part is included in kit 60007907 Hose cpl., 9032177 Hose cpl.
5044130	23	2	Dust Cover	Part is included in kit 60007907 Hose cpl., 9032177 Hose cpl.
5013853	24	2	Dowty washer	Tredo 1/2", Part is included in kit 60007907 Hose cpl., 9032177 Hose cpl.
60004615	25	1 PCS	Hose	3/8" L=1800 1/2GRU - 3/8G90LMC
60004216	26	1 PCS	Decal	TopGrip
1123673	27	1	Warning decal	
1123674	28	1	Warning decal	"Read manual"
60003665	29	1 PCS	Warning decal	"Max 2000 kg"

© 2025 Jost