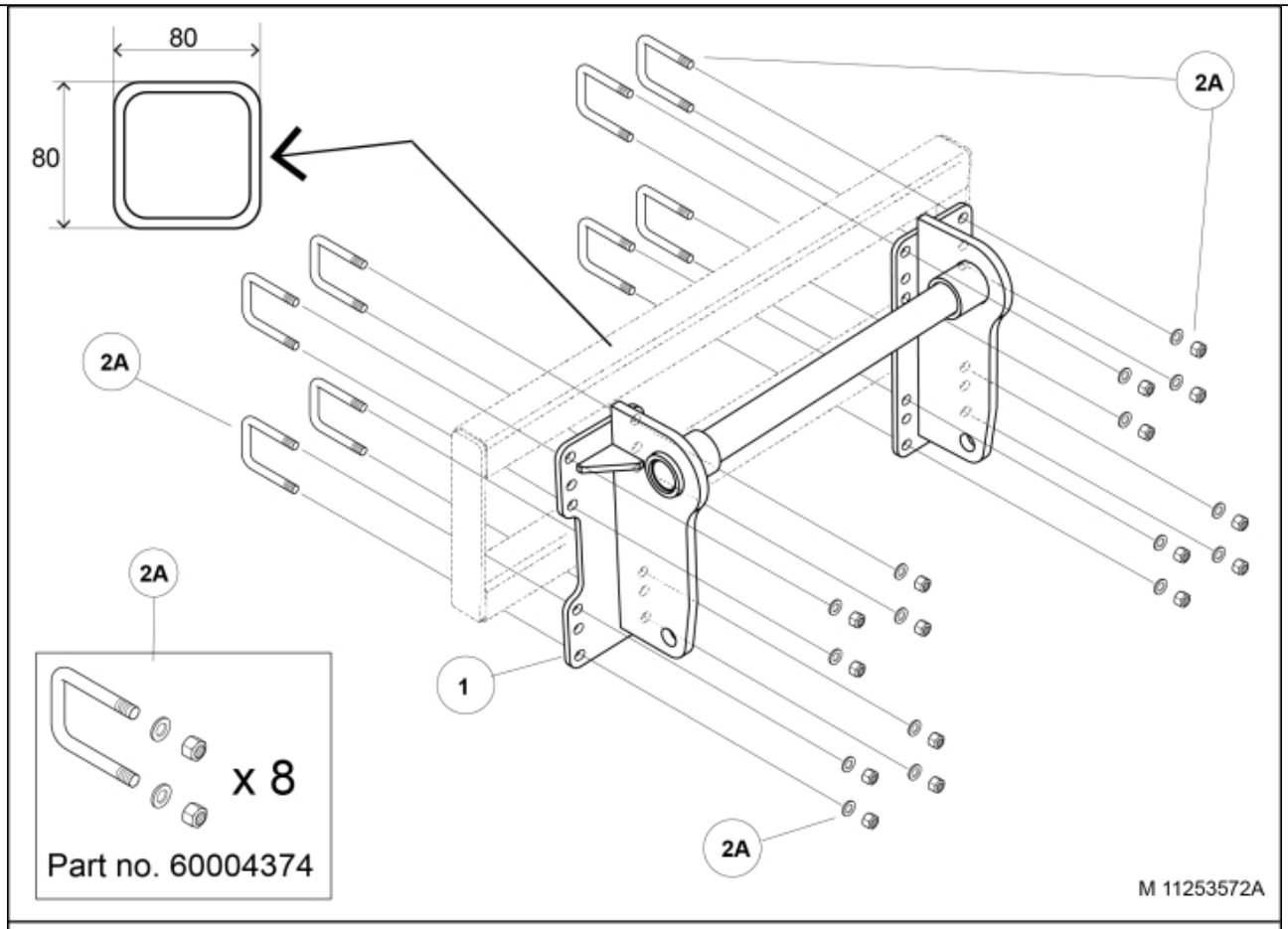
80
80
2A
2A
2A
1
2A
x 8
Part no. 60004374
M 11253572A

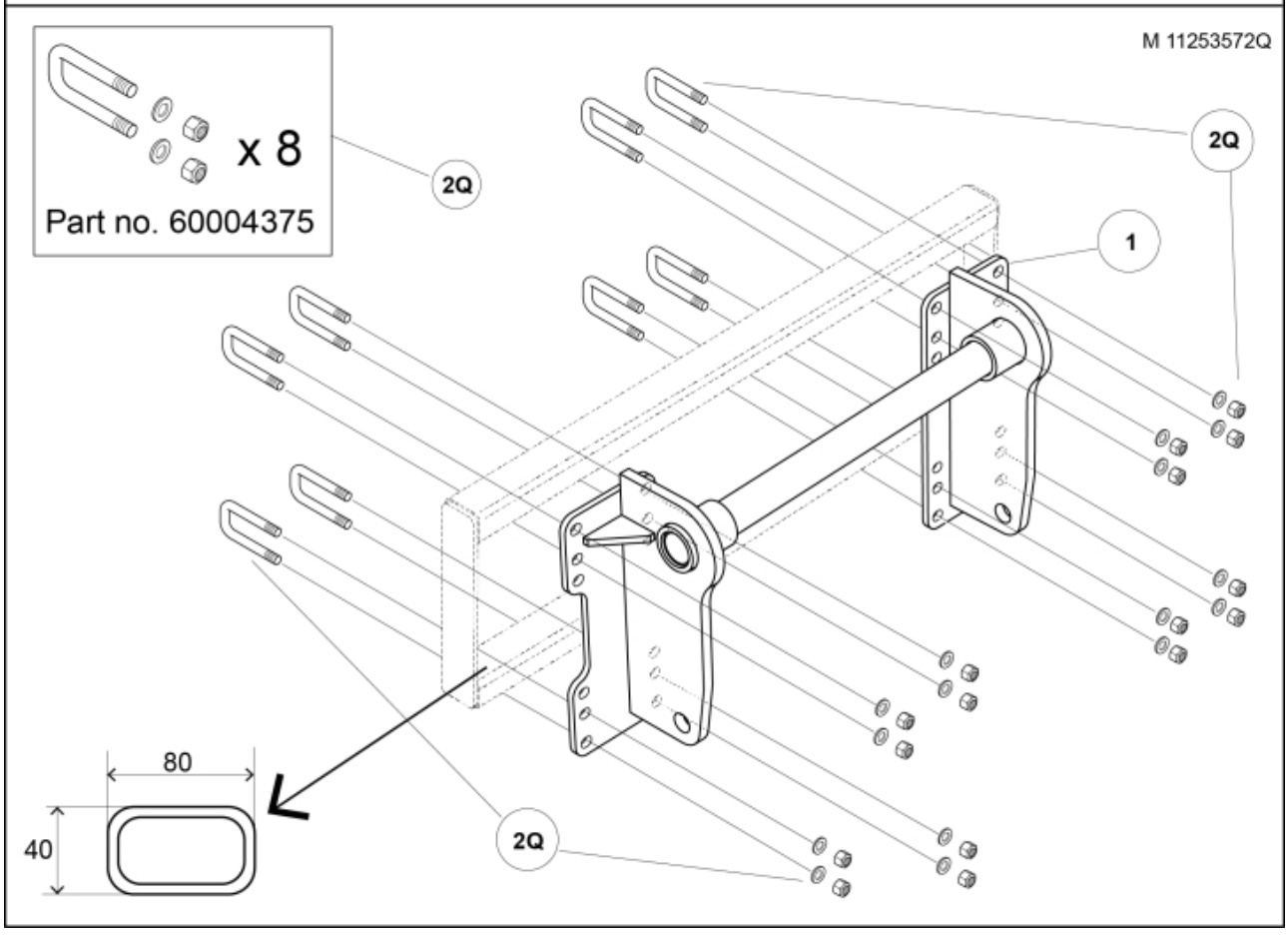
M 11253572Q
x 8
Part no. 60004375
2Q
2Q
1
80
40
2Q


© 2025 Jost

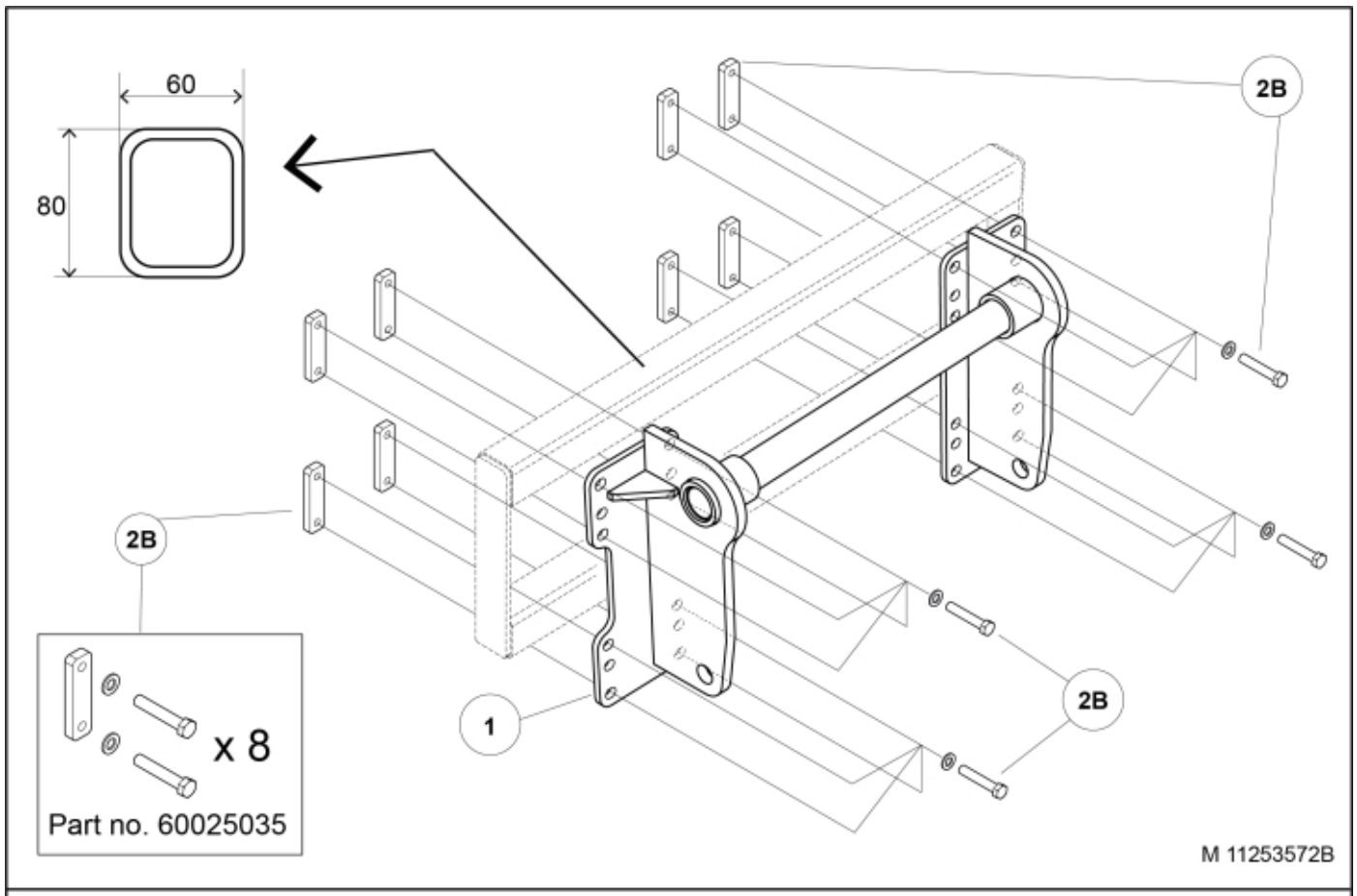
60
80
2B
2B
2B
1
x 8
Part no. 60025035
M 11253572B

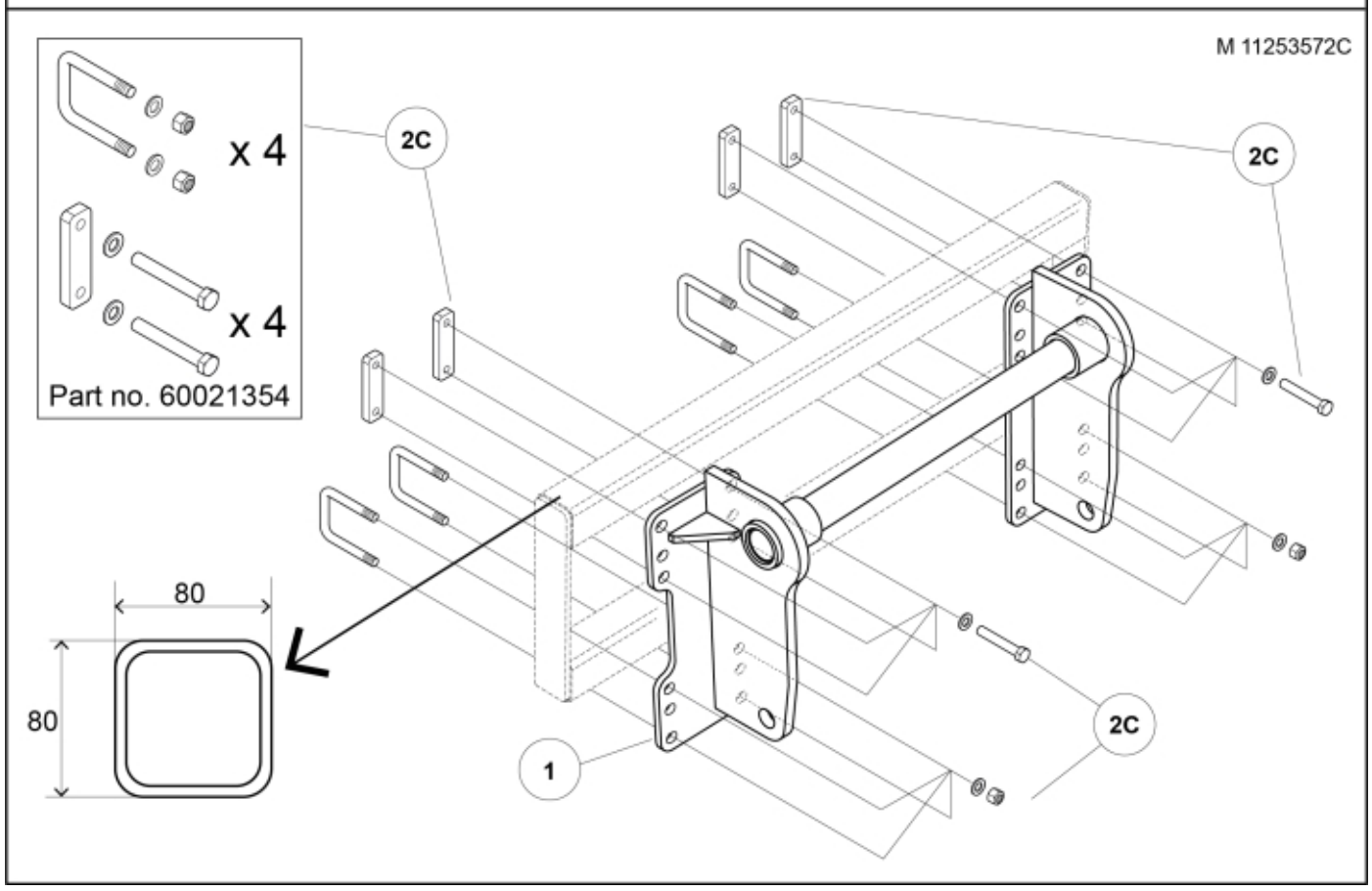
M 11253572C
x 4
x 4
Part no. 60021354
2C
2C
2C
1
80
80


© 2025 Jost

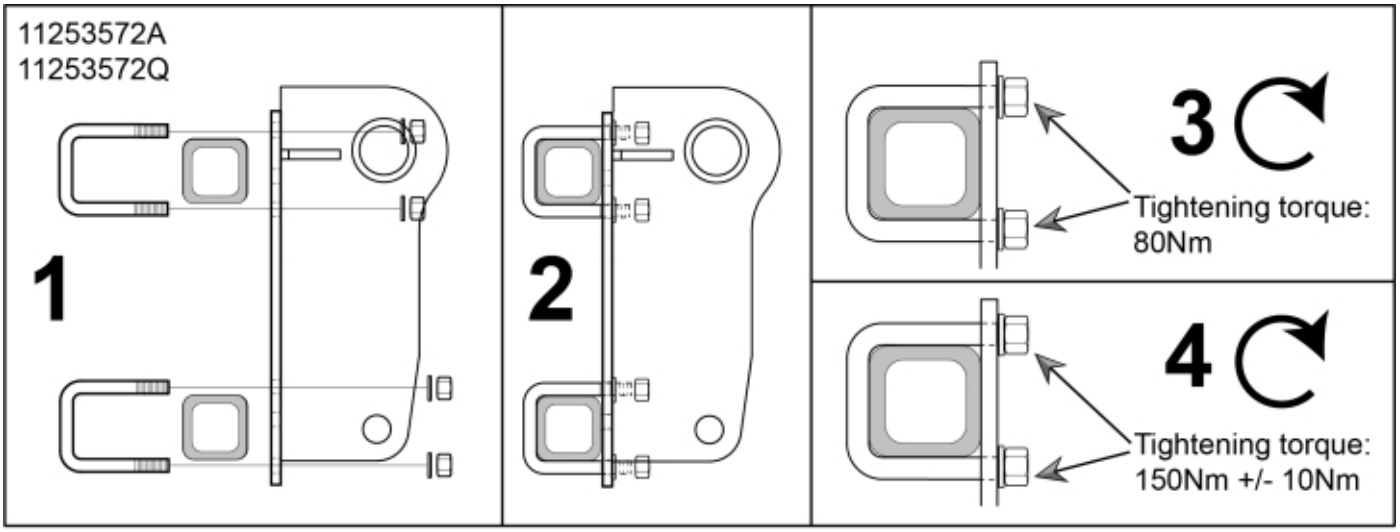
11253572A
11253572Q
1
2
3
Tightening torque:
80Nm
4
Tightening torque:
150Nm +/- 10Nm

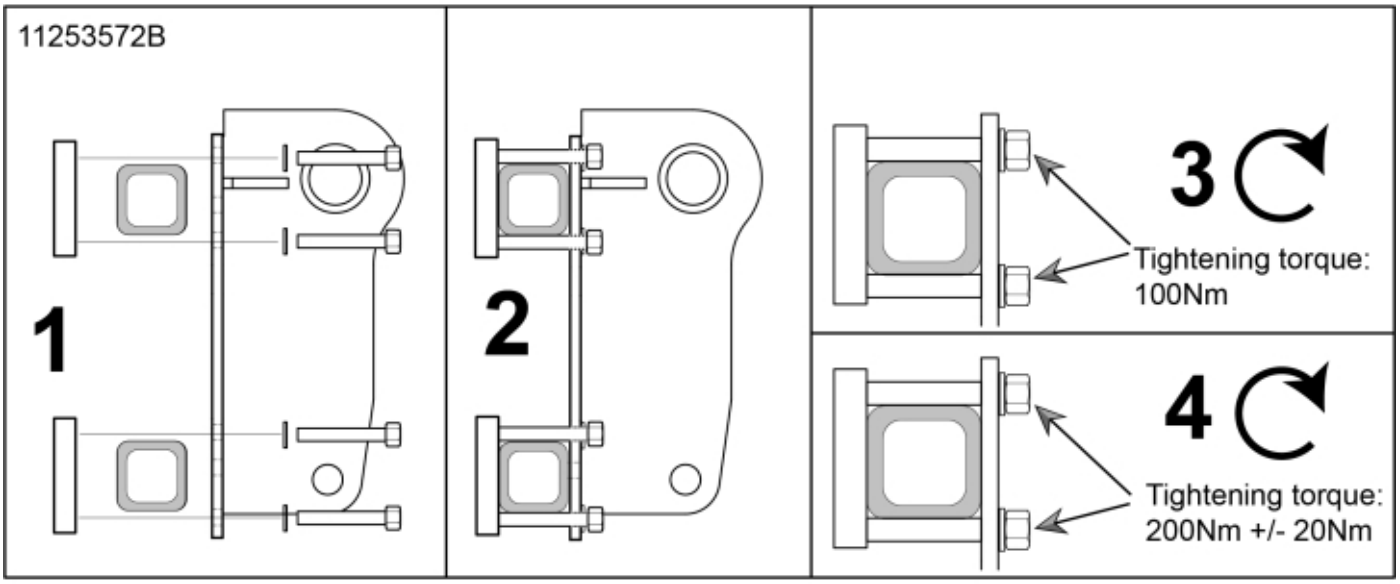
11253572B
1
2
3
Tightening torque:
100Nm
4
Tightening torque:
200Nm +/- 20Nm

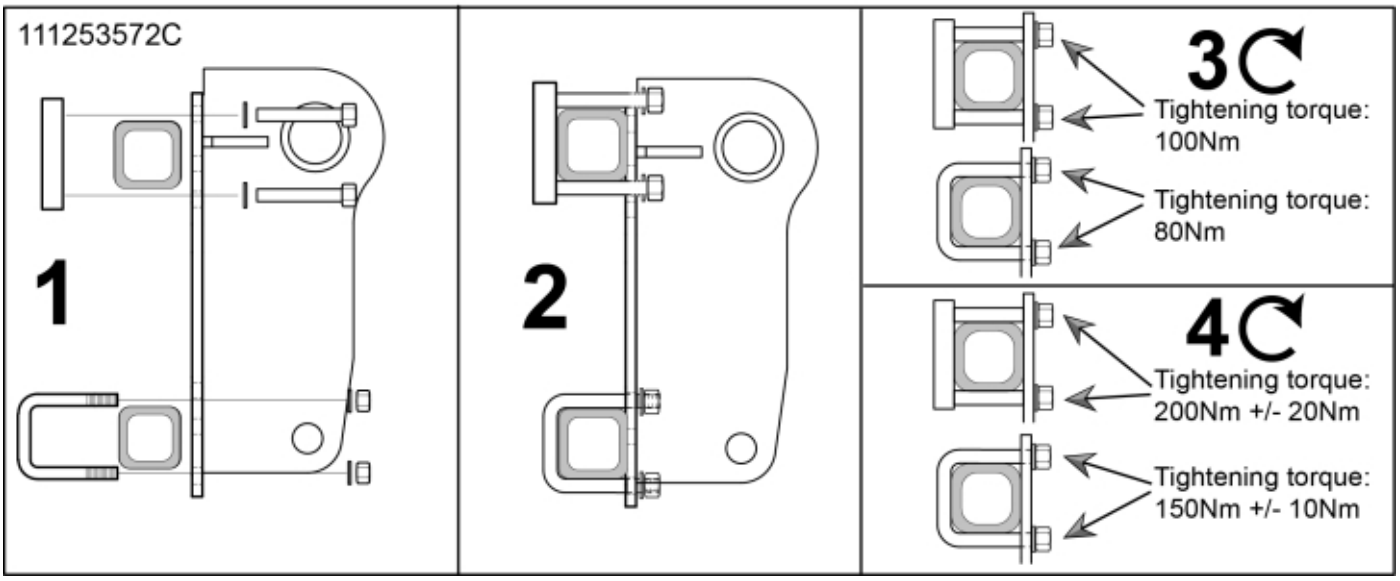
111253572C
1
2
3
Tightening torque:
100Nm
Tightening torque:
80Nm
4
Tightening torque:
200Nm +/- 20Nm
Tightening torque:
150Nm +/- 10Nm


© 2025 Jost

**Part assemblies** Attachment Manitou

| PartNo | Pos | Qty | Name | Specifications |
|---|---|---|---|---|
| 60003114 | 1 | 1 PCS | • Attachment | Without bolts |
| 60004374 | 2A | 1 PCS | • Bolt kit | |
| 60020469 | | 8 | •• U-bolt | 80x80 M16 (60003288) |
| 5013105 | | 16 | •• Washer | BRB 17 x 30 x 3 300HV |
| 5011557 | | 16 | •• Nut | Loc-King M16 |
| 60004375 | 2Q | 1 PCS | • Bolt kit | |
| 60020468 | | 8 PCS | •• U-bolt | 80x40 M16 (60003289) |
| 5013105 | | 16 | •• Washer | BRB 17 x 30 x 3 300HV |
| 5011557 | | 16 | •• Nut | Loc-King M16 |
| 60025035 | 2B | 1 PCS | Bolt kit | |
| 60050544 | | 8 PCS | • Plate | |
| 5050888 | | 16 | • Screw | M6S M16x90 10.9 |
| 5013105 | | 16 | • Washer | BRB 17 x 30 x 3 300HV |
| 60021354 | 2C | 1 PCS | Bolt kit | |
| 60050544 | | 4 PCS | • Plate | |
| 5050810 | | 8 | • Screw | M6S M16x120 |
| 5013105 | | 16 | • Washer | BRB 17 x 30 x 3 300HV |
| 60020469 | | 4 | • U-bolt | 80x80 M16 (60003288) |
| 5011557 | | 8 | • Nut | Loc-King M16 |


© 2025 Jost