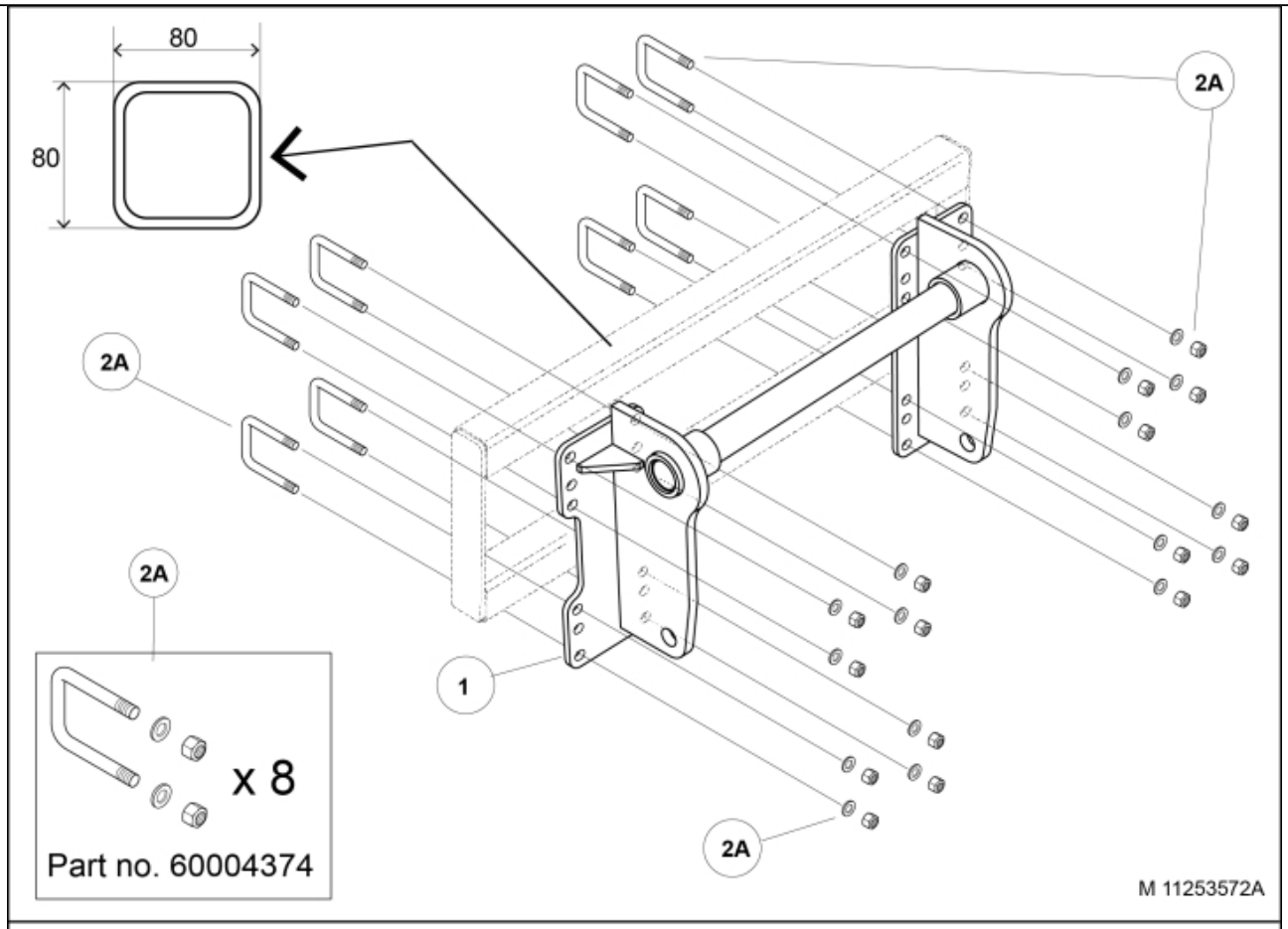
80
80
2A
2A
2A
1
2A
x 8
Part no. 60004374
M 11253572A

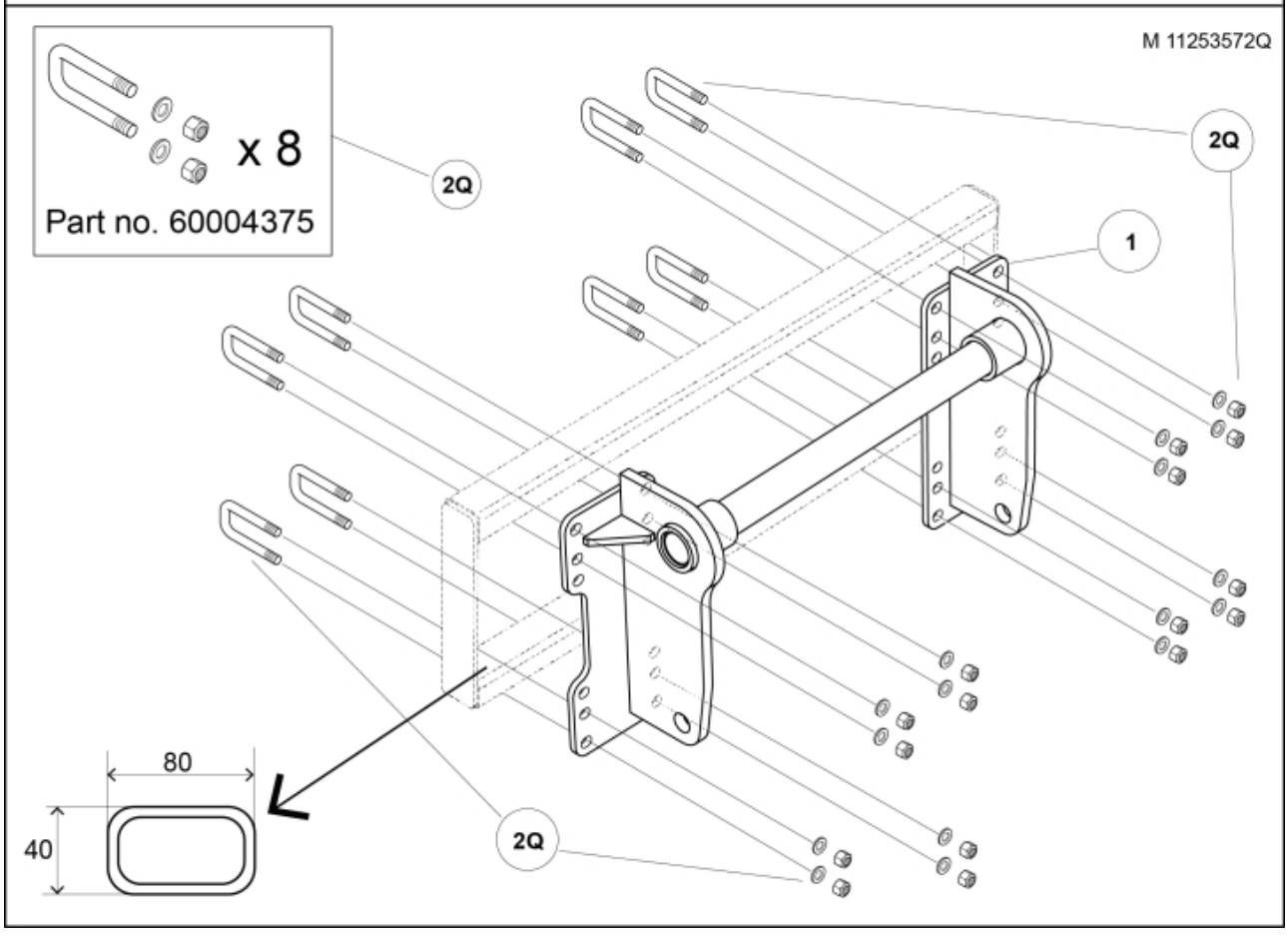
M 11253572Q
x 8
Part no. 60004375
2Q
2Q
1
80
40
2Q

© 2025 Jost

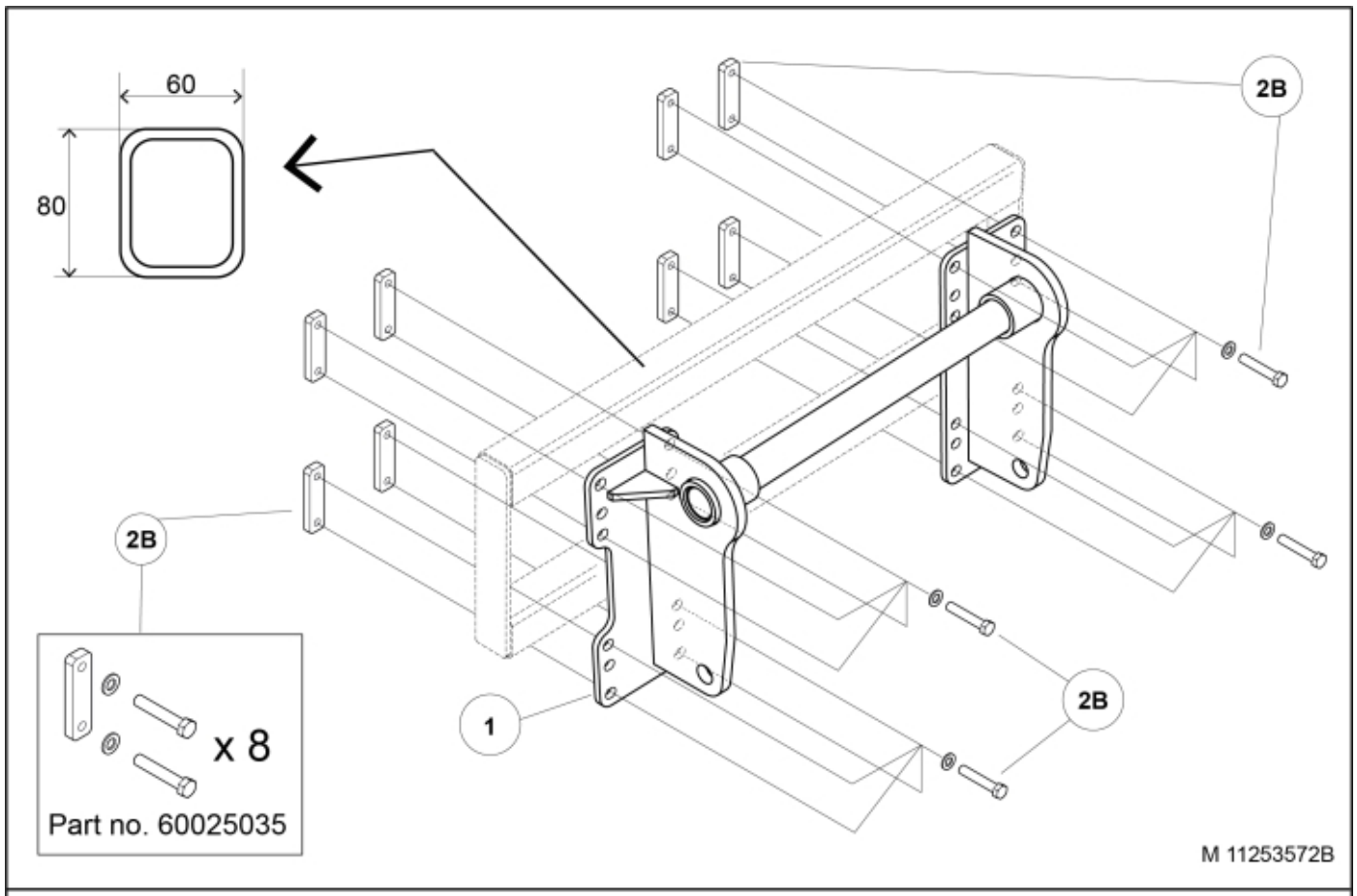
60
80
2B
2B
2B
1
x 8
Part no. 60025035
M 11253572B

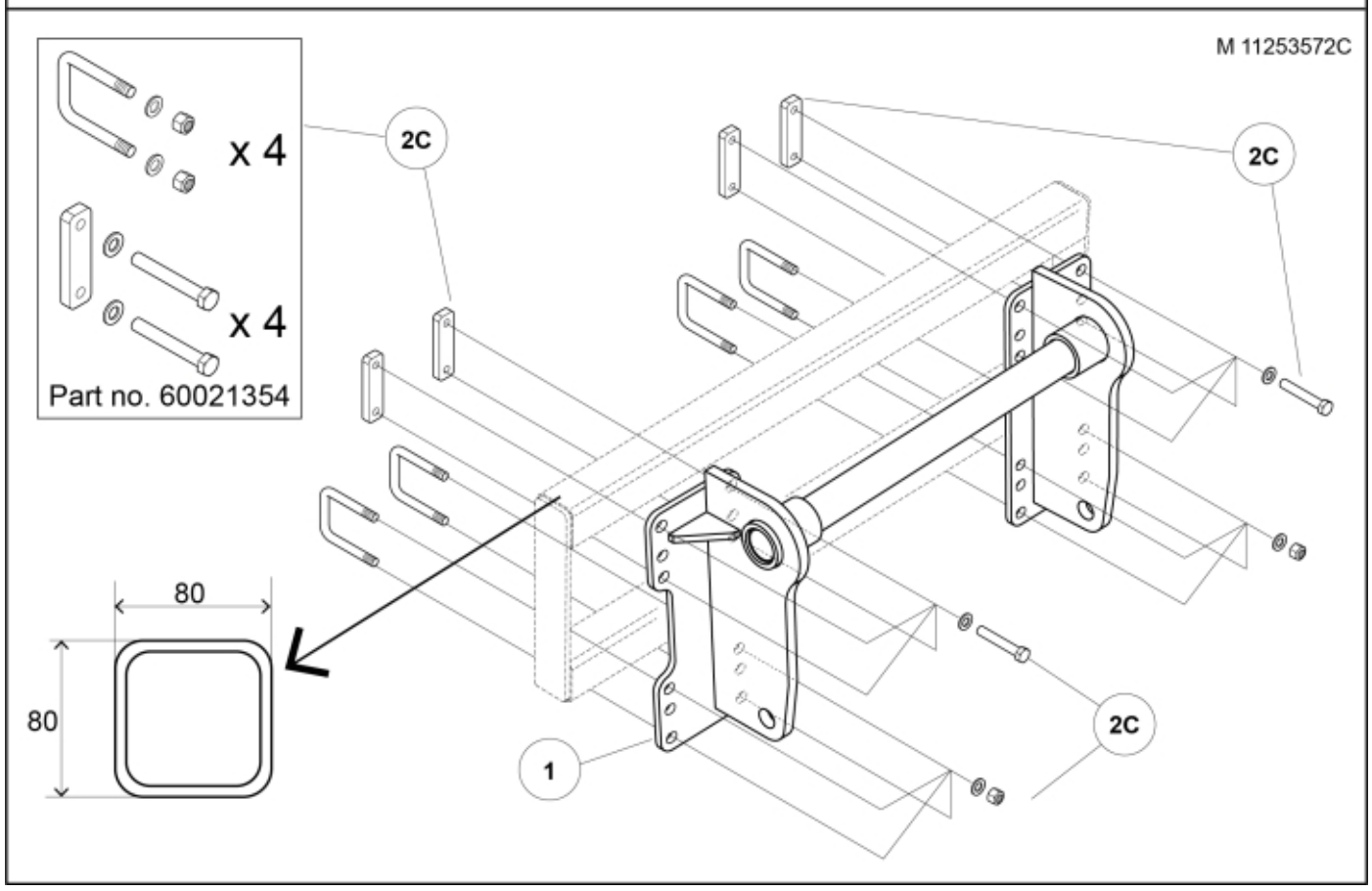
M 11253572C
x 4
x 4
Part no. 60021354
2C
2C
2C
1
80
80

© 2025 Jost

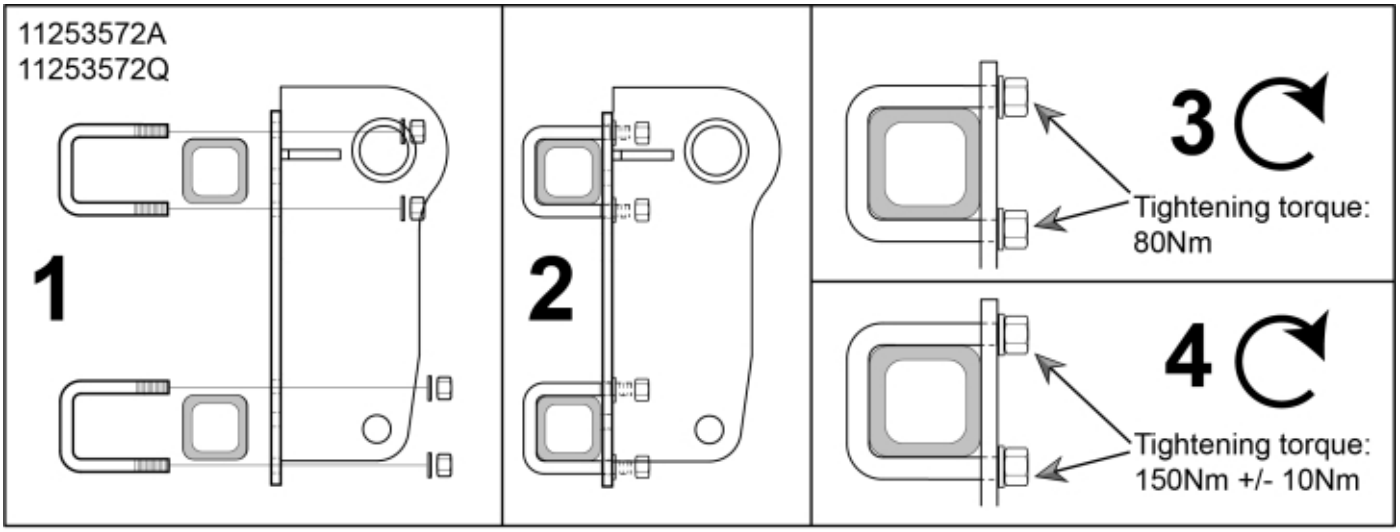
11253572A
11253572Q
1
2
3
Tightening torque:
80Nm
4
Tightening torque:
150Nm +/- 10Nm

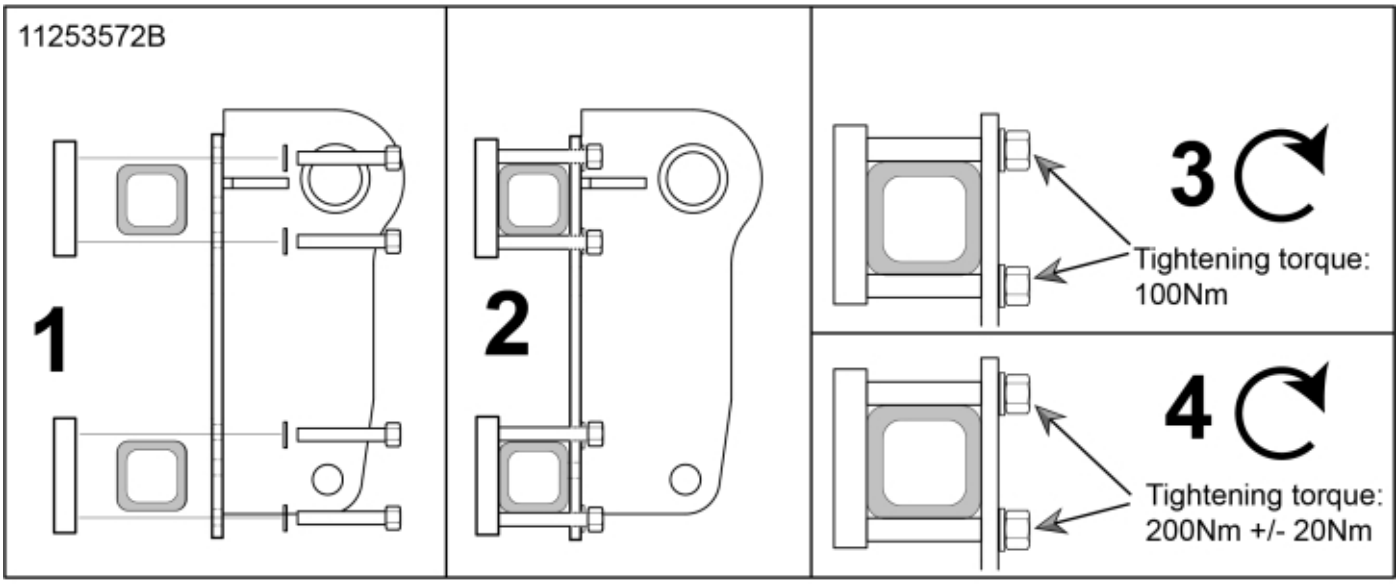
11253572B
1
2
3
Tightening torque:
100Nm
4
Tightening torque:
200Nm +/- 20Nm

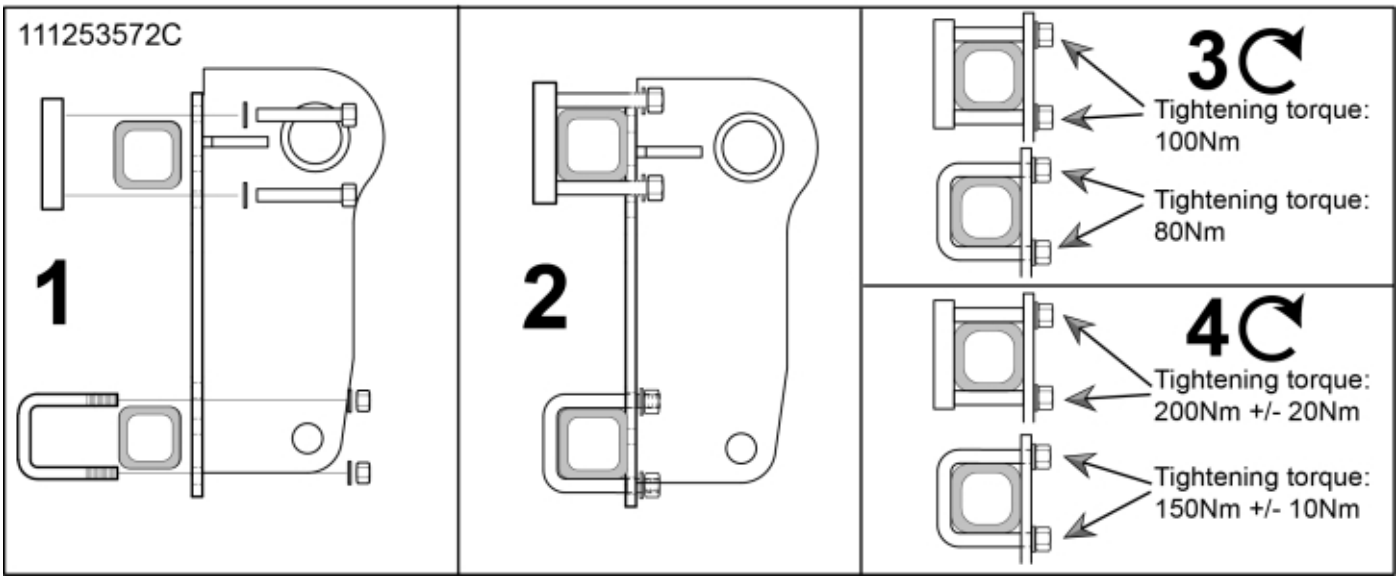
111253572C
1
2
3
Tightening torque:
100Nm
Tightening torque:
80Nm
4
Tightening torque:
200Nm +/- 20Nm
Tightening torque:
150Nm +/- 10Nm

© 2025 Jost

Part assemblies Attachment Manitou

PartNo	Pos	Qty	Name	Specifications
60003114	1	1 PCS	• Attachment	Without bolts
60004374	2A	1 PCS	• Bolt kit	
60020469		8	•• U-bolt	80x80 M16 (60003288)
5013105		16	•• Washer	BRB 17 x 30 x 3 300HV
5011557		16	•• Nut	Loc-King M16
60004375	2Q	1 PCS	• Bolt kit	
60020468		8 PCS	•• U-bolt	80x40 M16 (60003289)
5013105		16	•• Washer	BRB 17 x 30 x 3 300HV
5011557		16	•• Nut	Loc-King M16
60025035	2B	1 PCS	Bolt kit	
60050544		8 PCS	• Plate	
5050888		16	• Screw	M6S M16x90 10.9
5013105		16	• Washer	BRB 17 x 30 x 3 300HV
60021354	2C	1 PCS	Bolt kit	
60050544		4 PCS	• Plate	
5050810		8	• Screw	M6S M16x120
5013105		16	• Washer	BRB 17 x 30 x 3 300HV
60020469		4	• U-bolt	80x80 M16 (60003288)
5011557		8	• Nut	Loc-King M16

© 2025 Jost