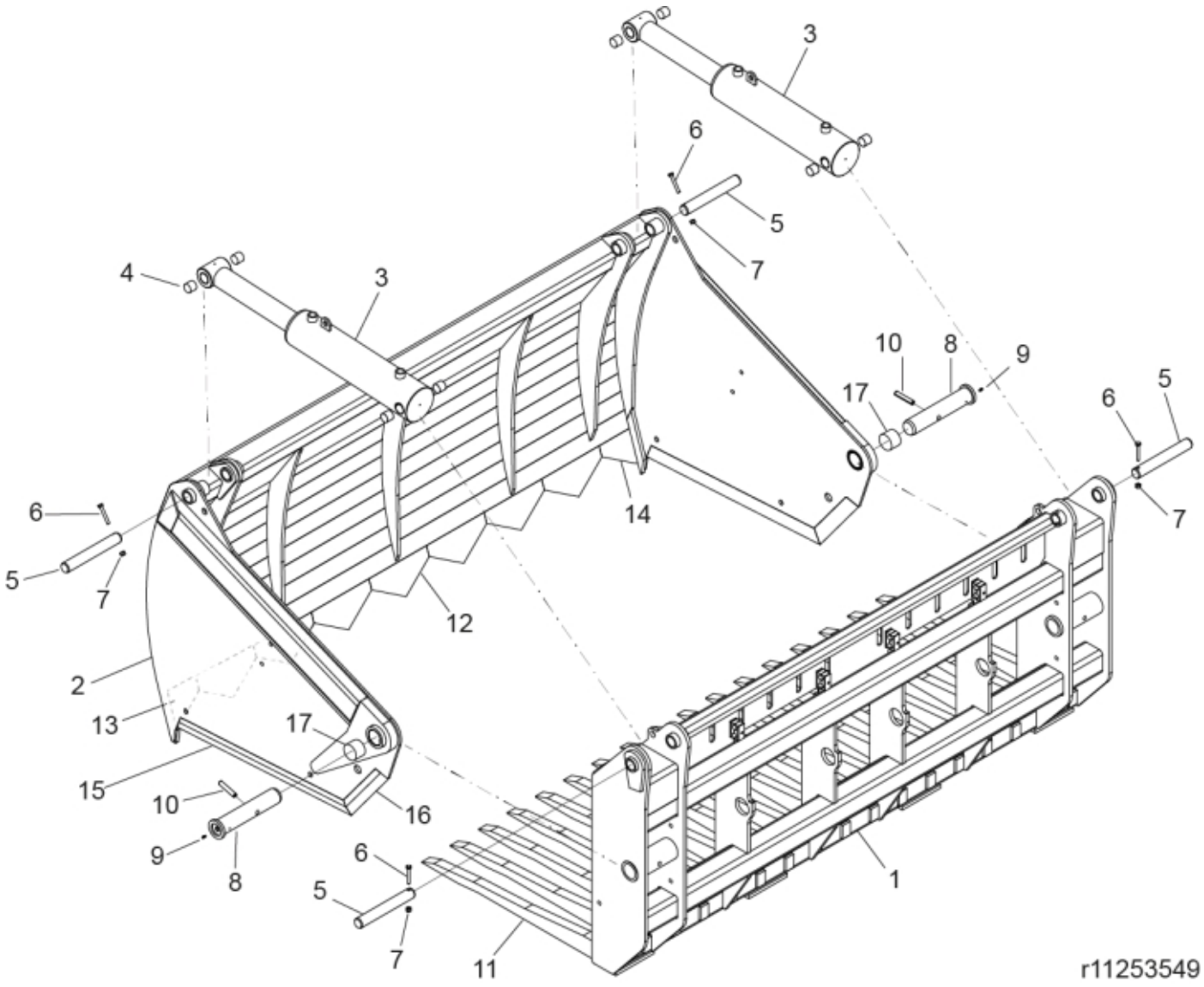
3
6
5
7
4
3
10
8
9
17
6
5
7
14
6
5
7
12
2
13
17
15
10
16
9
8
6
5
7
11
1
r11253549

© 2025 Jost

Part assemblies	Silocut SK 220
Specification	Year From: 1/1/2015 12:00:00 AM
	Year To: 8/31/2018 12:00:00 AM

PartNo	Pos	Qty	Name	Specifications
60050136	1	1 PCS	Frame	
60050138	2	1 PCS	Front Part	
60050140	3	2 PCS	Cylinder	
60050145		1	• Seal kit	Silocut SK cyl.
5050317	4	8 PCS	Bushing	
60050141	5	4 PCS	Pin	
5002082	6	4	Screw	M6S M10x70 (8.8)
5011554	7	4	Nut	Loc-King M10
60050143	8	2 PCS	Pin	
5050311	9	2 PCS	Grease fitting	M6
60050142	10	2 PCS	Securing pin	Ø16mm L=90mm
60050144	11	17 PCS	Tine	
60050146	12	6 PCS	Centre Knife	
60050147	13	1 PCS	Knife LH	
60050148	14	1 PCS	Knife RH	
60050149	15	2 PCS	Knife	
60050150	16	2 PCS	Knife	
5050312	17	2 PCS	Bushing	60x60
60004282	18	2 PCS	Decal, Brand	Silocut SK

© 2025 Jost