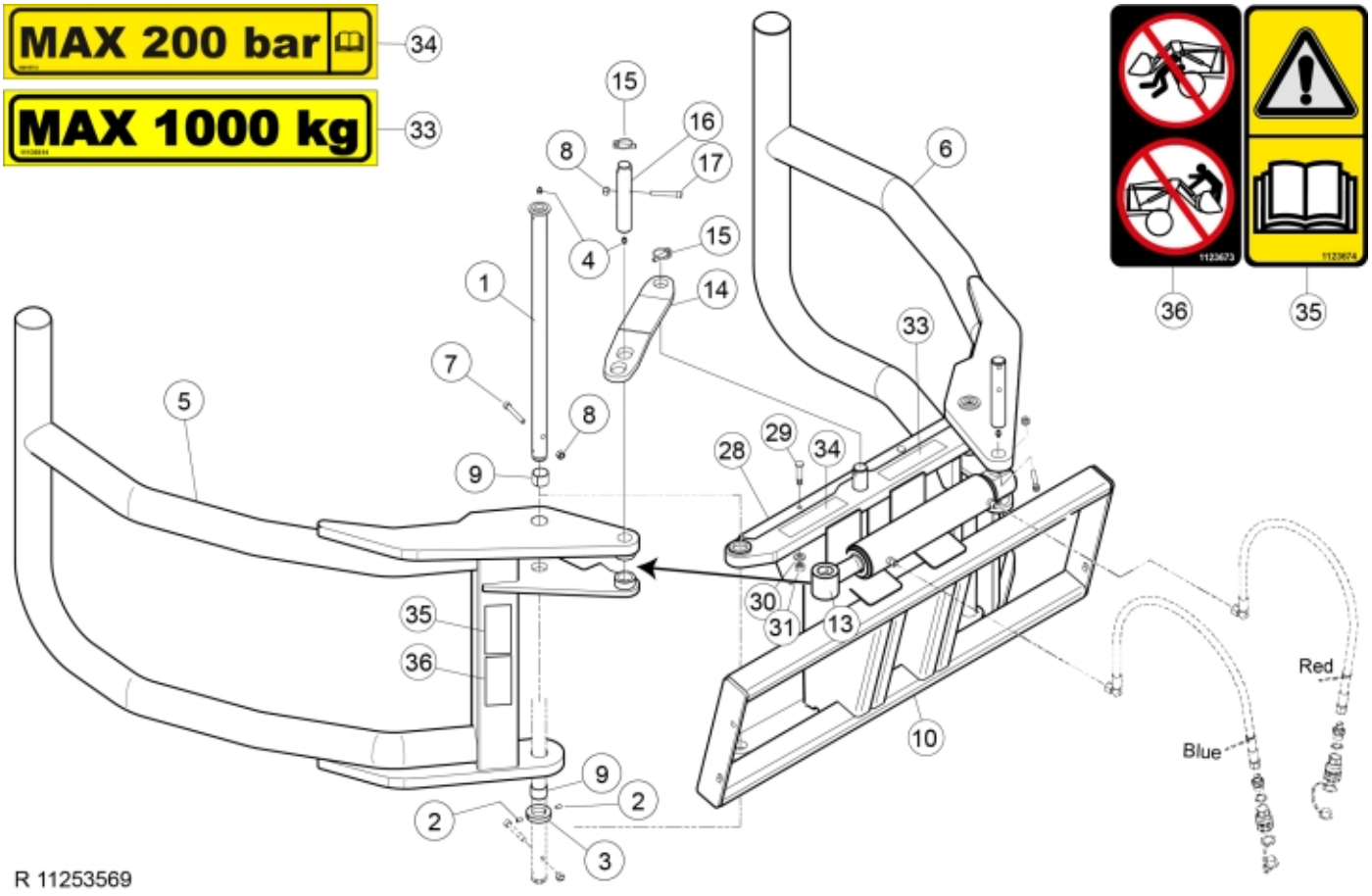

R 11253569

© 2025 Jost

Part assemblies	Flexigrip 200 80x80
Specification	Year From: 1/1/2010 12:00:00 AM

PartNo	Pos	Qty	Name	Specifications
11253570		1	Flexigrip 200 80x80	1/1/2010 12:00:00 AM
1116703	1	2 PCS	Pin	
5005444	2	4 PCS	Stop screw	S6SS M8x16
1109551	3	2	Locking Ring	
5023005	4	4	Greaser	M 10 x 1
11260570	5	1 PCS	Grab arm LH	
11260569	6	1 PCS	Grab arm RH	
5004079	7	2 PCS	Screw	MC6S M10x75
5011554	8	4	Nut	Loc-King M10
5018517	9	4 PCS	Bushing	D35 L=30
60019107	10	1 PCS	Frame	Replaces 60004472
60126216-1	13	1	Cylinder	4/8/2026 12:00:00 AM
1209758	14	1	Locking mechanism	
1102001	15	2	Linch pin	
60032873	16	2 PCS	Pin	Replaces 1116701
5004082	17	2 PCS	Screw	MC6S 10x65
60005645-22	28	2 PCS	Edge cover	
5006014	29	4 PCS	Screw	MVBF M8X50 (8.8)
5013936	30	4 PCS	Washer	TBRB 13x24x4 fzb
5011553	31	4	Nut	M6M M8 Loc-king
11136514	33	1	Warning decal	"Max 1000 kg"
60018712	34	1	Warning decal	
1123674	35	1	Warning decal	"Read manual"
1123673	36	1	Warning decal	

© 2025 Jost