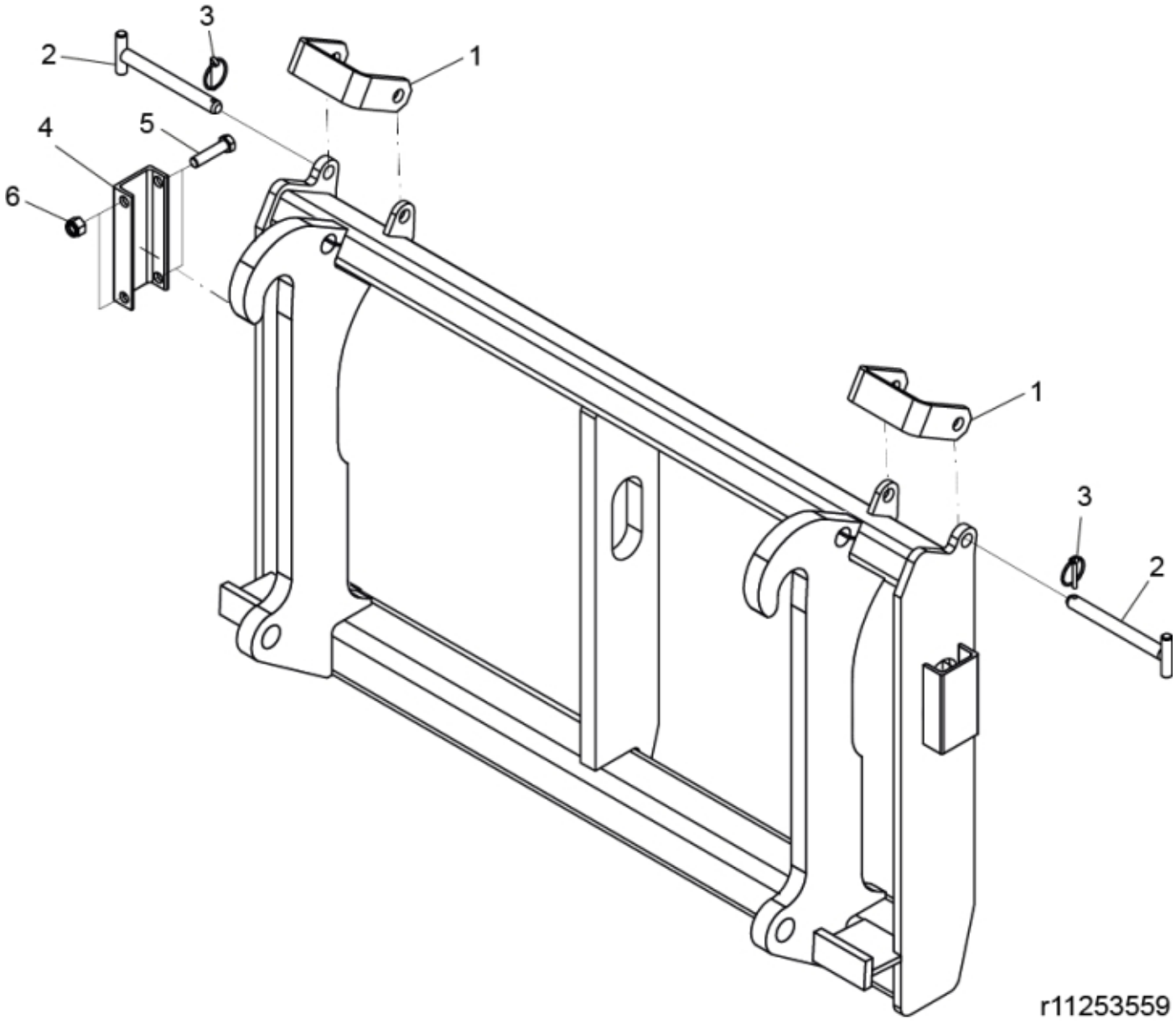

© 2025 Jost

Part assemblies	JCB 50 PFC Qfit
Specification	Year From: 8/1/2016 12:00:00 AM
	Year To: 12/31/2017 12:00:00 AM

PartNo	Pos	Qty	Name	Specifications
11253560		1	JCB 50 PFC Qfit	8/1/2016 12:00:00 AM, 12/31/2017 12:00:00 AM
60050152	1	2	Locking plate	
60050153	2	2 PCS	Pin	
5050318	3	2 PCS	Linch pin	
60050154	4	1 PCS	Cover plate	
5002161	5	2 PCS	Screw	M6S M16 x 100 (8.8)
5011557	6	2	Nut	Loc-King M16
60001649	7	2 PCS	Decal, Brand	Original Implements 307x85

© 2025 Jost