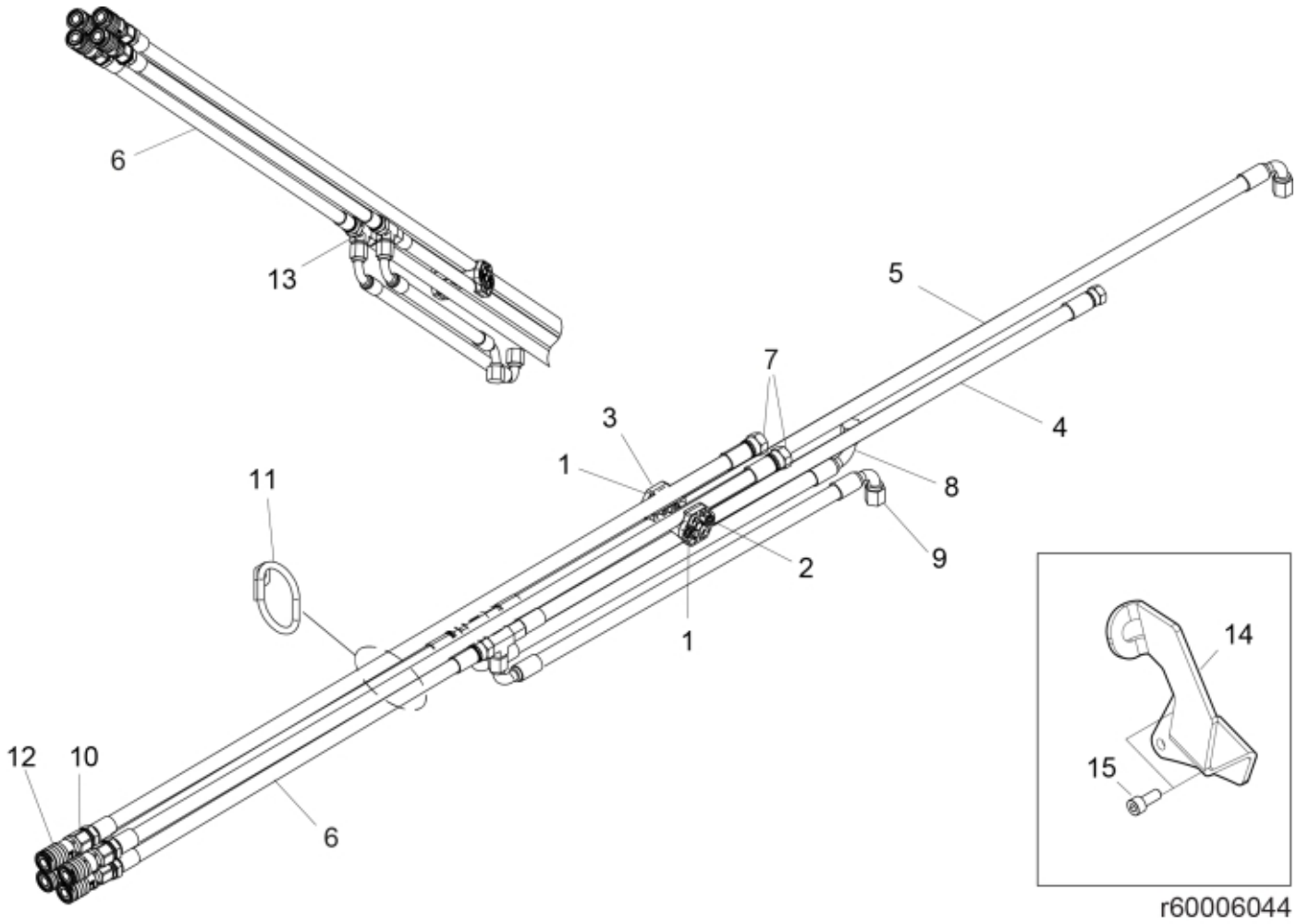

r60006044

© 2025 Jost

Description	no harness
Part assemblies	Main hose kit

PartNo	Pos	Qty	Name	Specifications
5221880	1	2	Hose clamp	
5004030	2	2	Screw	MC6S M6 x 45
20708137	3	2	Nut	M6 FZB, 708137
9031712	4	1	Hose	3/8" L=3860mm
9031716	5	1	Hose	3/8" L=4280mm
9032331	6	2	Hose	3/8" L=850mm
9032333	7	2	Hose	3/8" L=3040mm
9031710	8	1	Hose	3/8" L=520mm
9031939	9	1	Hose	3/8" L=520mm
5013853	10	4	Dowty washer	Tredo 1/2", Part is included in kit 60007907 Hose cpl., 9032177 Hose cpl.
5221966	11	1	Hose guide	
5044976	12	4	Coupling	3/8" (5044946)
5028142	13	2	Adaptor	JIC 2x9/16 1x3/4
60049421	14	1	Holder kit	
5004061	15	2	• Screw	MC6S M8x20

© 2025 Jost