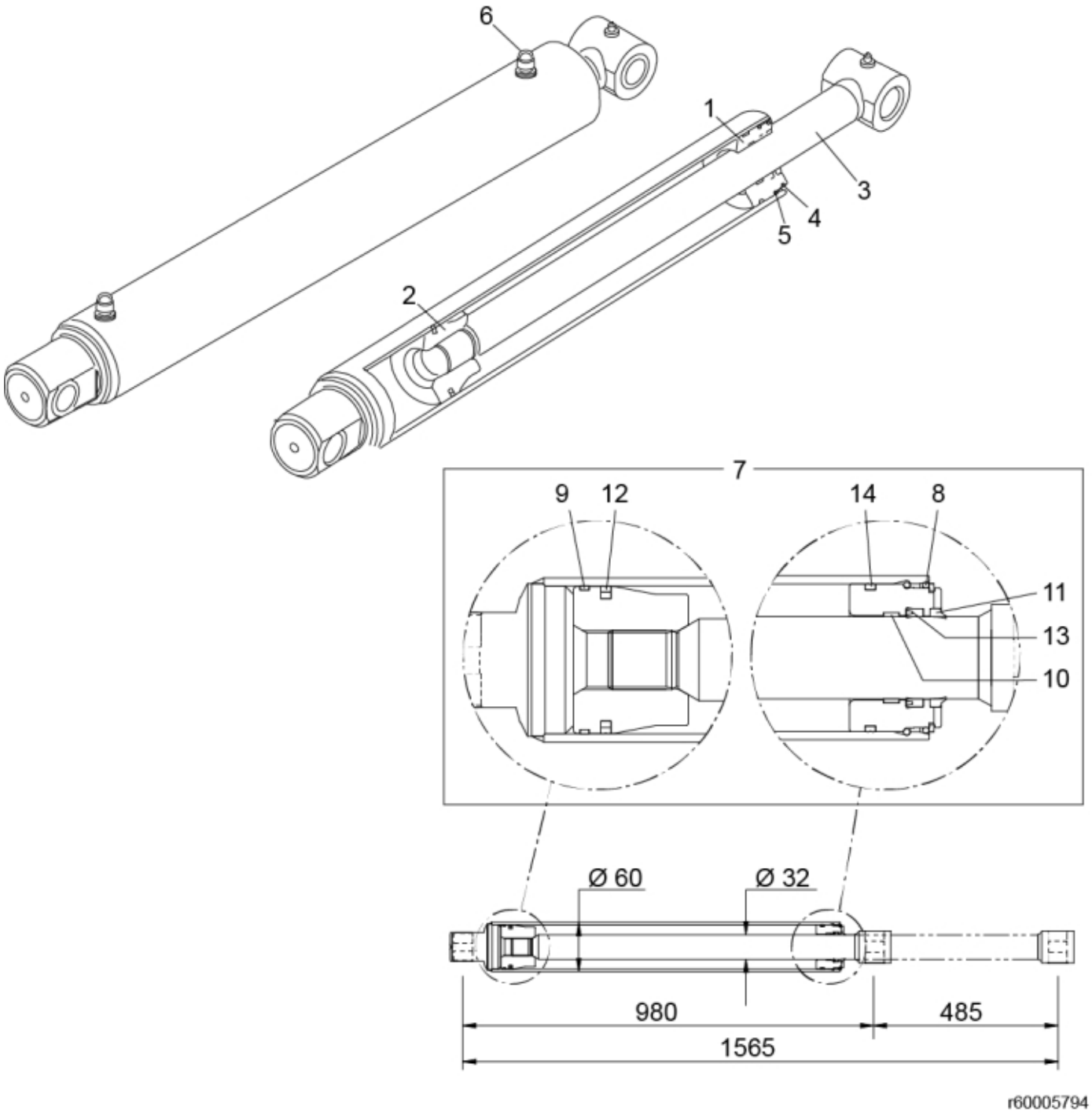

© 2025 Jost

Description	60/32
Part assemblies	Cylinder
Specification	Specification: Glossy Black

PartNo	Pos	Qty	Name	Specifications
12716011	1	1	Bearing	
12716012	2	1 PCS	Piston	
60005803	3	1	Piston rod	
5017001	4	1	Retaining ring	
5017000	5	1	Retaining ring	
5028083	6	2	Plug	
5034114	7	1	Seal kit	
5039028	8	1	• O-ring	55.56 x 3.53
5040054	9	1	• Guide ring	60 x 55 x 5.5
5040058	10	1	• Guide ring	35 x 9.6
5040059	11	1	• Wiper	42 x 31 x 10
5040055	12	1	• Piston seal	60.6 x 49 x 4
5040057	13	1	• Seal kit	43 x 31 x 10
5040056	14	1	• Seal kit	60 x 53.6 x 5.6

© 2025 Jost