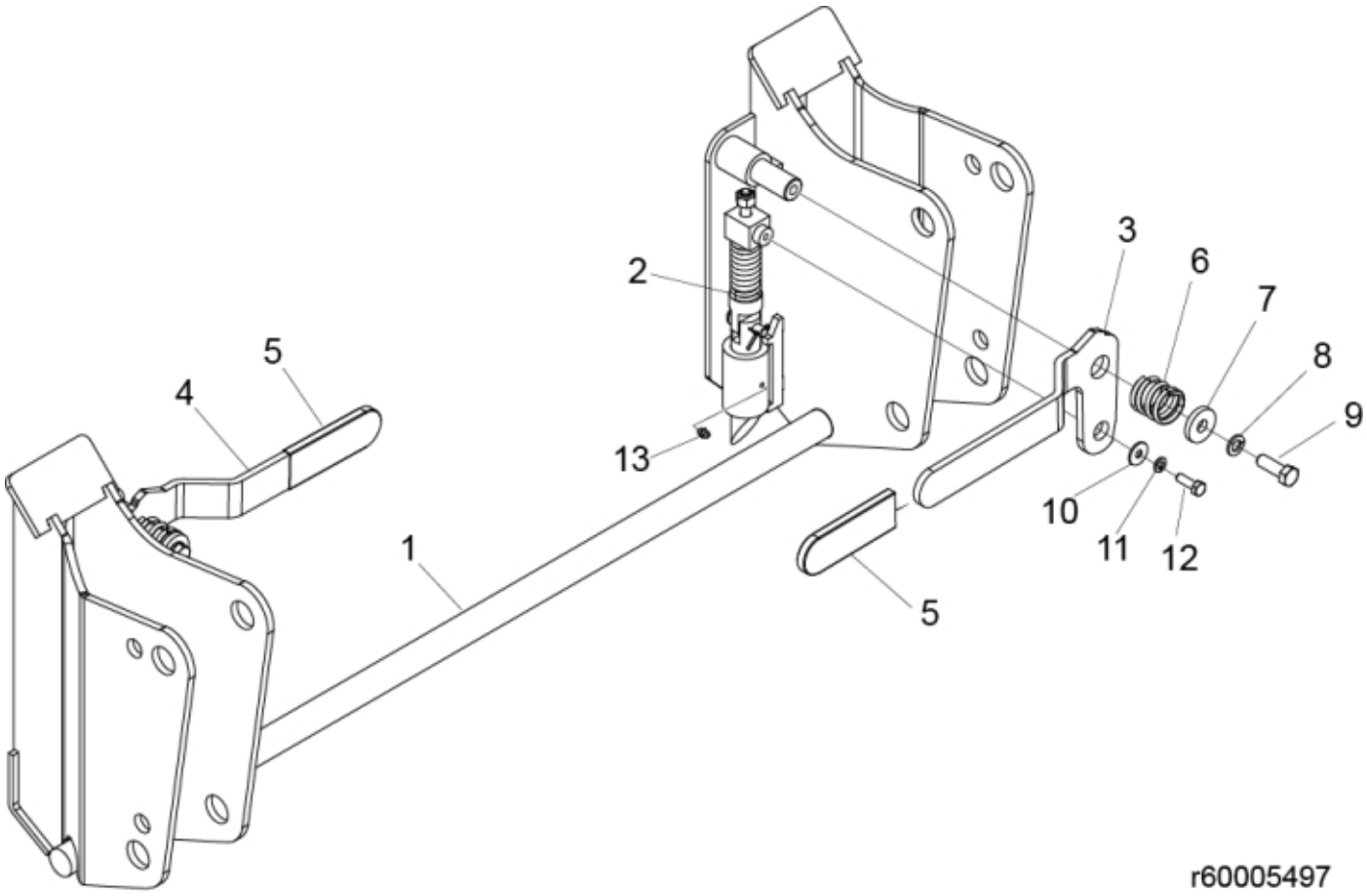

© 2025 Jost

Description	Tool carrier
Part assemblies	Skid Steer

PartNo	Pos	Qty	Name	Specifications
60005497-13		1	Skid Steer	NLA. Replaced by 60014453-1
60005502-13	1	1	Tool carrier	Case Red NLA. Replaced by 60014453-1
60017709	2	2	Pin cpl.	replaces 5221580
5221534	3	1	Handle RH	
5221533	4	1	Handle LH	
5022144	5	2	Cover	
5221539	6	2	Spring	
5013924	7	2	Washer	13x36x6
5013408	8	2	Spring washer	FBB 12,2 x 21,1 x 2,5
5002103	9	2	Screw	M12 x 35
5013916	10	2	Washer	8,4x24x2
5013404	11	2	Spring washer	8,1x14,8x2
5002052	12	2	Screw	M6S M8x25
5021901	13	2	Grease fitting	M6

© 2025 Jost