LH-side

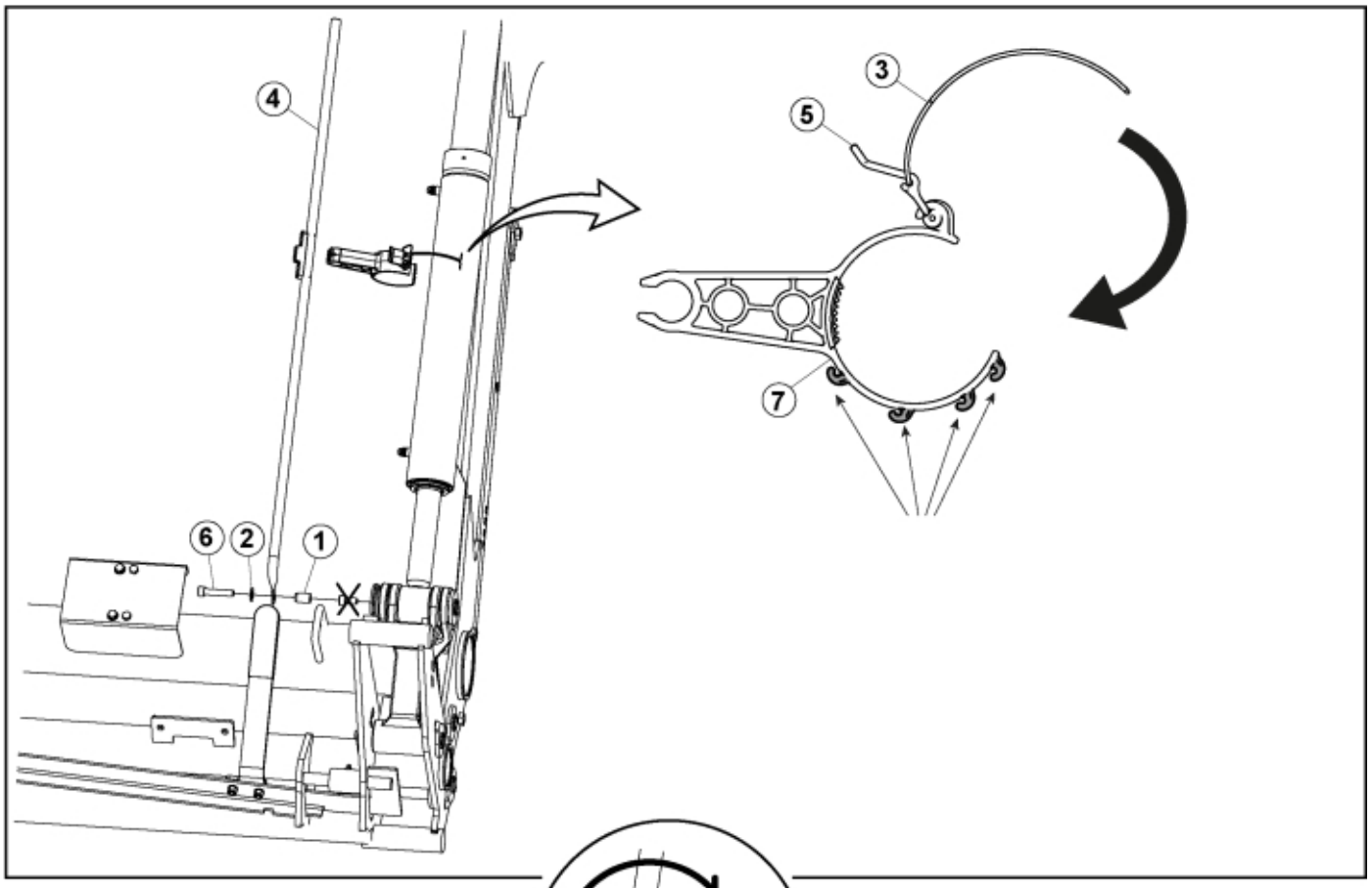

LH -side to RH-side

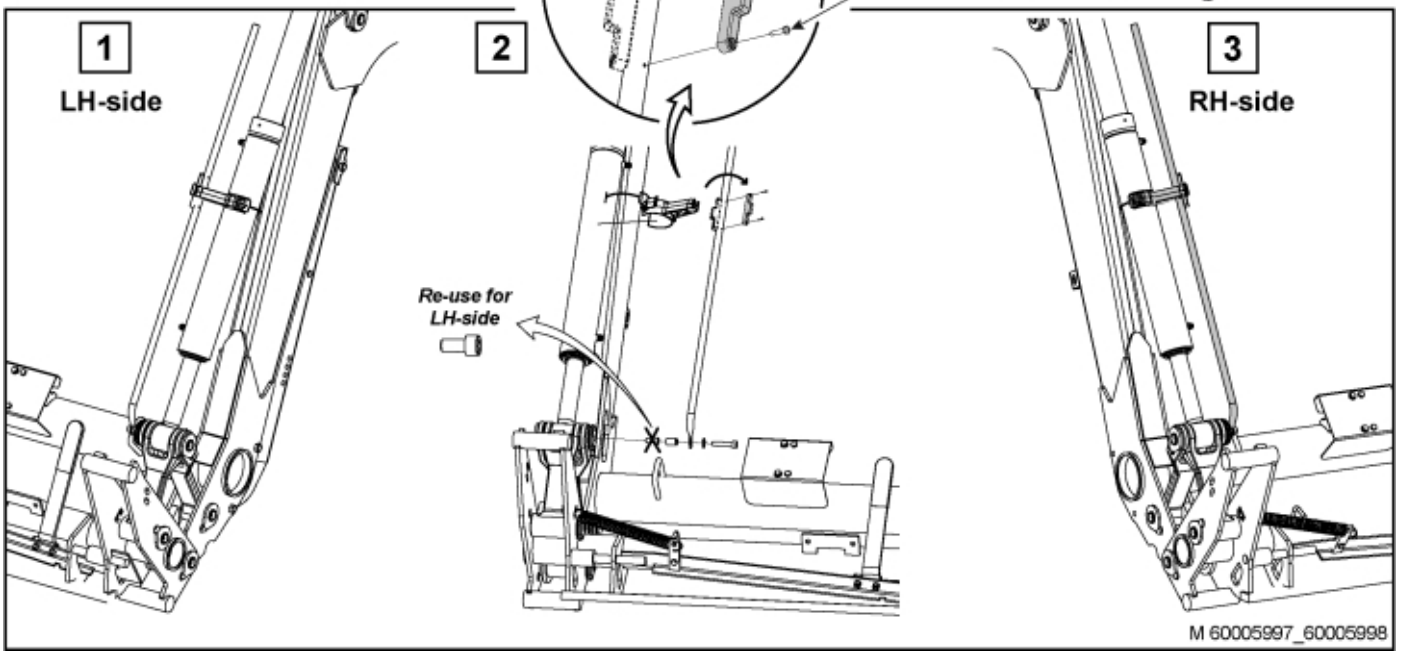

© 2025 Jost

Part assemblies Indicator kit

PartNo	Pos	Qty	Name	Specifications
60005997		1 PCS	Indicator kit	
5215227	1	1	Spacer	
5013110	2	1	Washer	BRB 10.5x22x2
5221166	3	1 PCS	Wire	
5221787	4	1	Indicator rod	
5215223	5	1 PCS	Handle	
5050605	6	1	Screw	MC6S 10x50 Loc
5215221	7	1 PCS	Pivot post	

© 2025 Jost