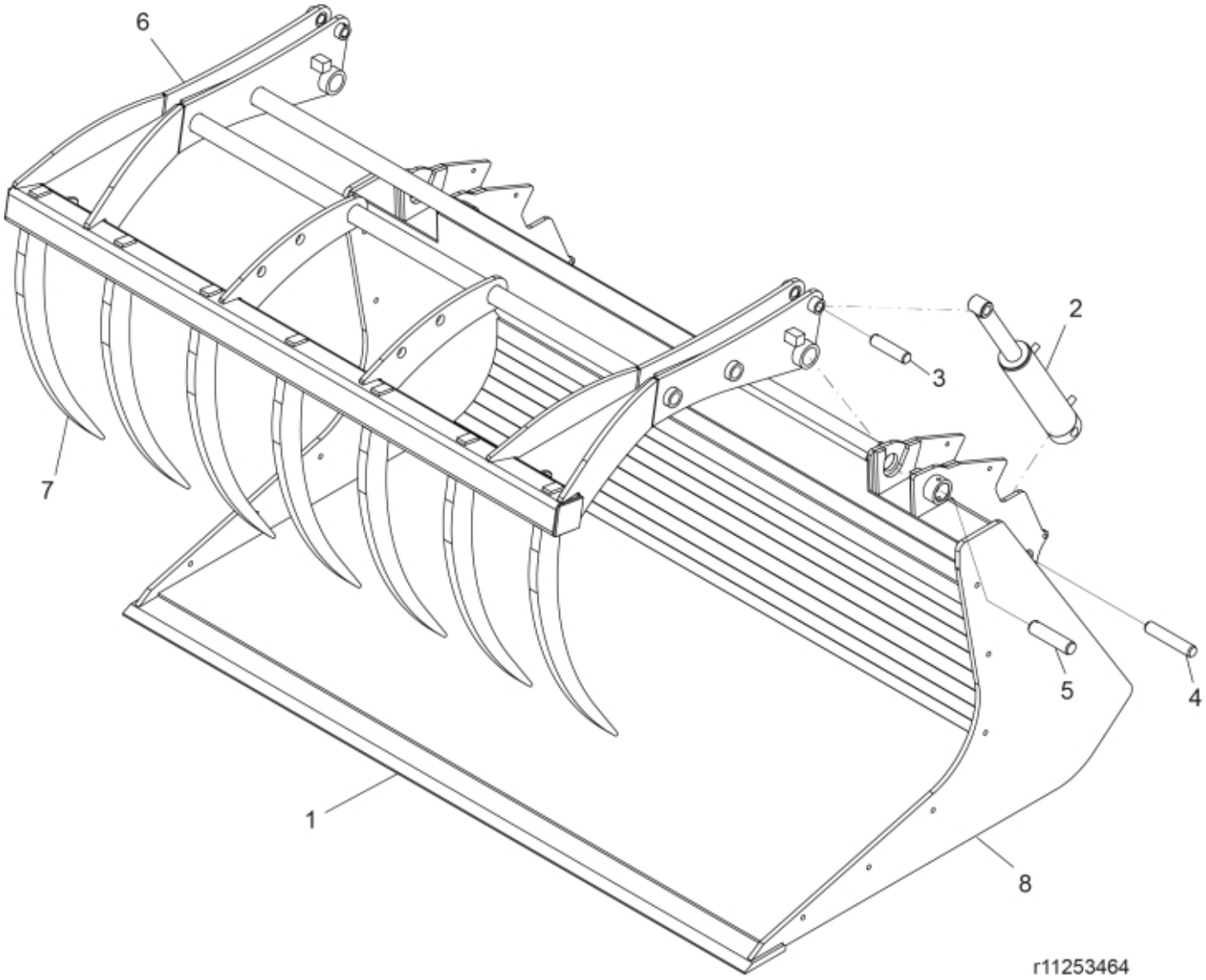

© 2025 Jost

Part assemblies	Multibenne XL 16,24 Bobcat FDI S/N -40899
Specification	Year From: 1/1/2015 12:00:00 AM
	Serial number to: 40899
	Year To: 5/31/2016 12:00:00 AM

PartNo	Pos	Qty	Name	Specifications
60050059	1	1 PCS	Cutting edge	
60050080	2	2 PCS	Cylinder	
60050082		1	• Seal kit	
60050074	3	2 PCS	Pin	
60050072	4	2 PCS	Pin	
60050084	5	2 PCS	Pin	
60010583	6	1 PCS	Grab head	
60050078	7	7 PCS	Tine	
60050070	8	1 PCS	Bucket	Bucket Multibenne XL
60004291	9	1 PCS	Decal	Multibenne XL

© 2025 Jost