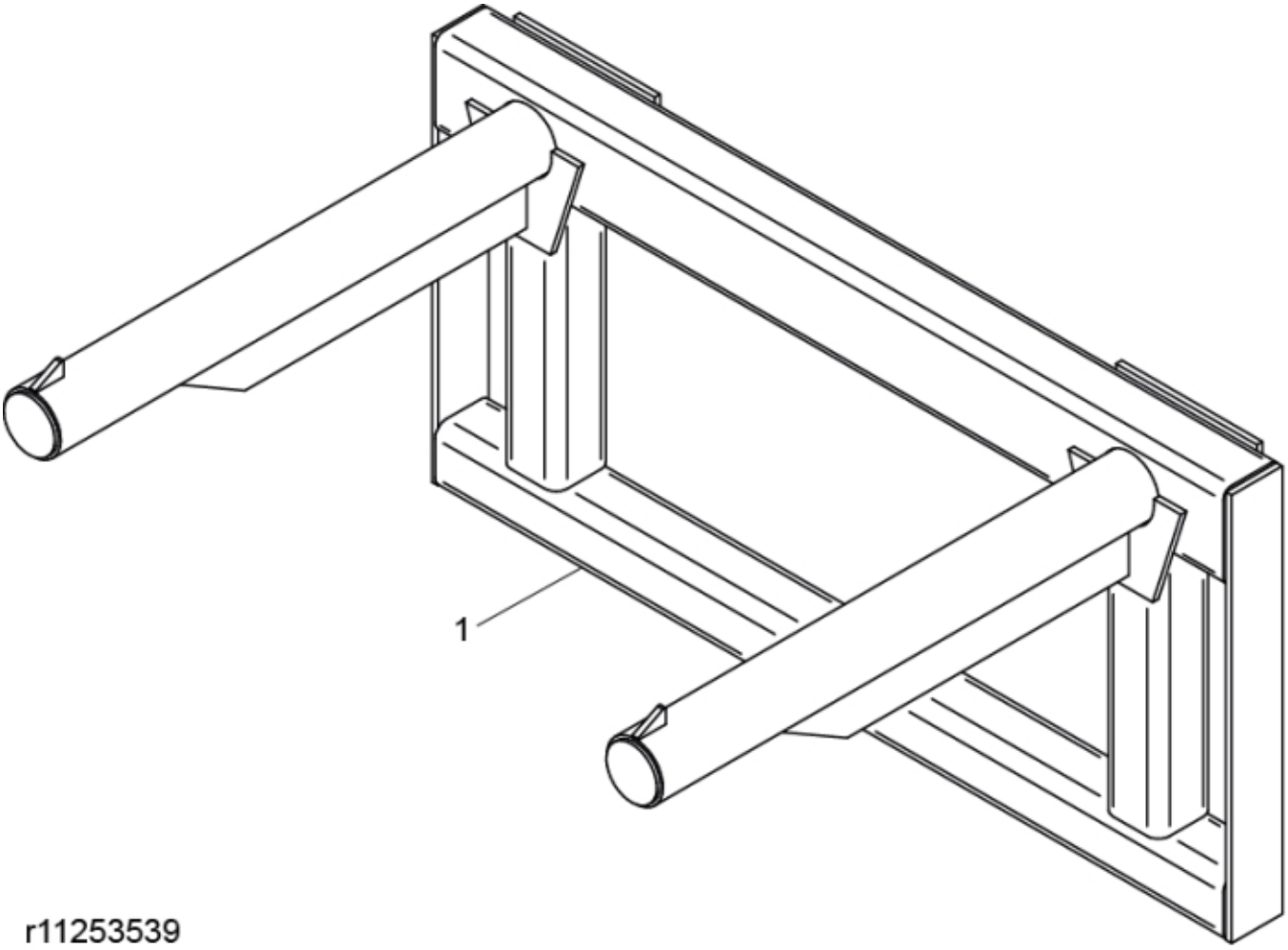

r11253539

© 2025 Jost

Part assemblies	BL1200 Claas Scorpion
Specification	Year From: 8/1/2016 12:00:00 AM
	Year To: 12/31/2017 12:00:00 AM

PartNo	Pos	Qty	Name	Specifications
11253542	1	1	BL1200 Claas Scorpion	8/1/2016 12:00:00 AM, 12/31/2017 12:00:00 AM
60001650	2	2 PCS	Decal	Original Implements 361,7x100

© 2025 Jost