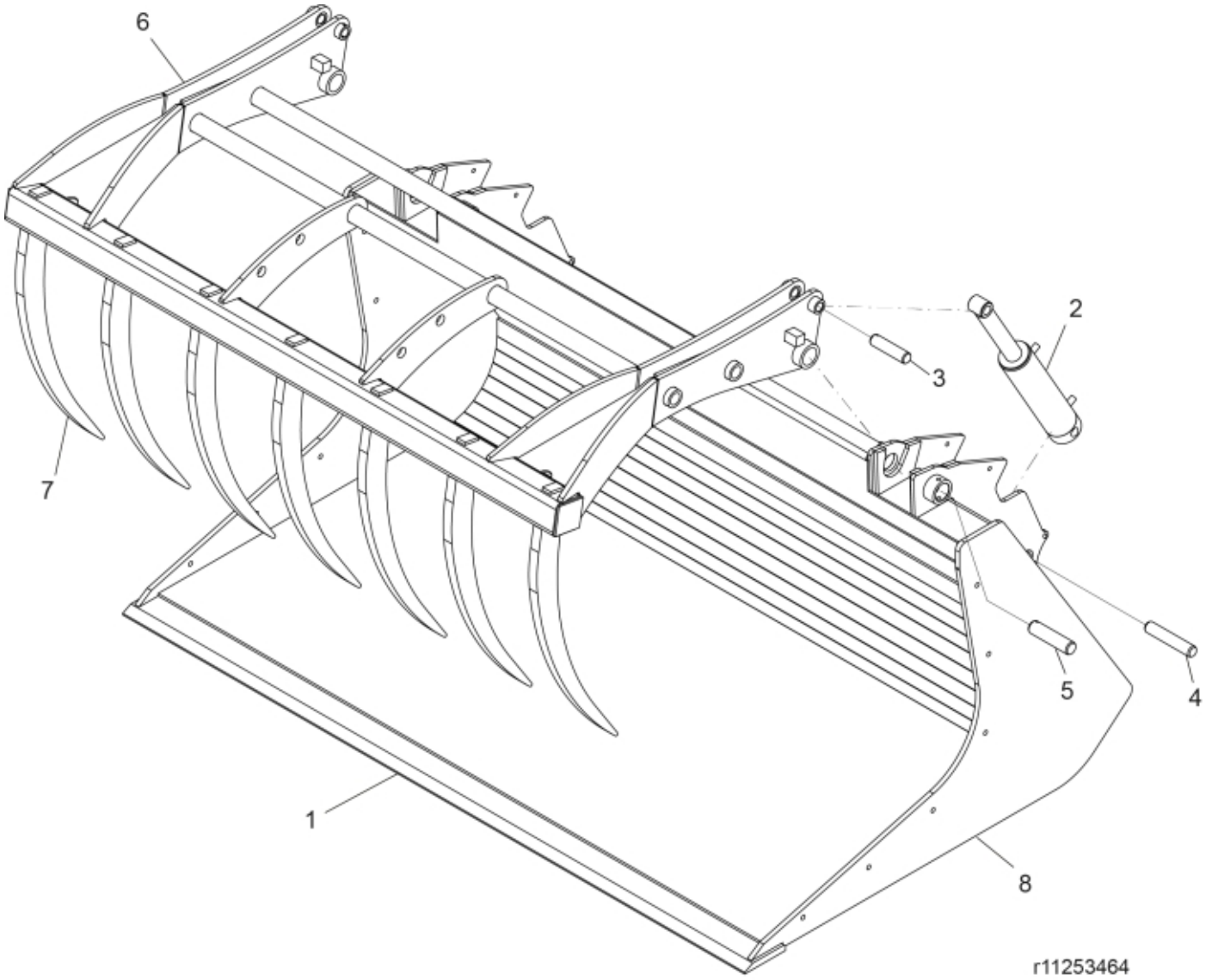



© 2025 Jost

| | |
|---|---|
| **Part assemblies** | Multibenne XL 16,24 CNH LM S/N -40899 |
| **Specification** | Year From: 1/1/2015 12:00:00 AM |
| | Serial number to: 40899 |
| | Year To: 5/31/2016 12:00:00 AM |

| PartNo | Pos | Qty | Name | Specifications |
|---|---|---|---|---|
| 60050059 | 1 | 1 PCS | Cutting edge | |
| 60050080 | 2 | 2 PCS | Cylinder | |
| 60050082 | | 1 | • Seal kit | |
| 60050074 | 3 | 2 PCS | Pin | |
| 60050072 | 4 | 2 PCS | Pin | |
| 60050084 | 5 | 2 PCS | Pin | |
| 60010583 | 6 | 1 PCS | Grab head | |
| 60050078 | 7 | 7 PCS | Tine | |
| 60050070 | 8 | 1 PCS | Bucket | Bucket Multibenne XL |
| 60004291 | 9 | 1 PCS | Decal | Multibenne XL |


© 2025 Jost