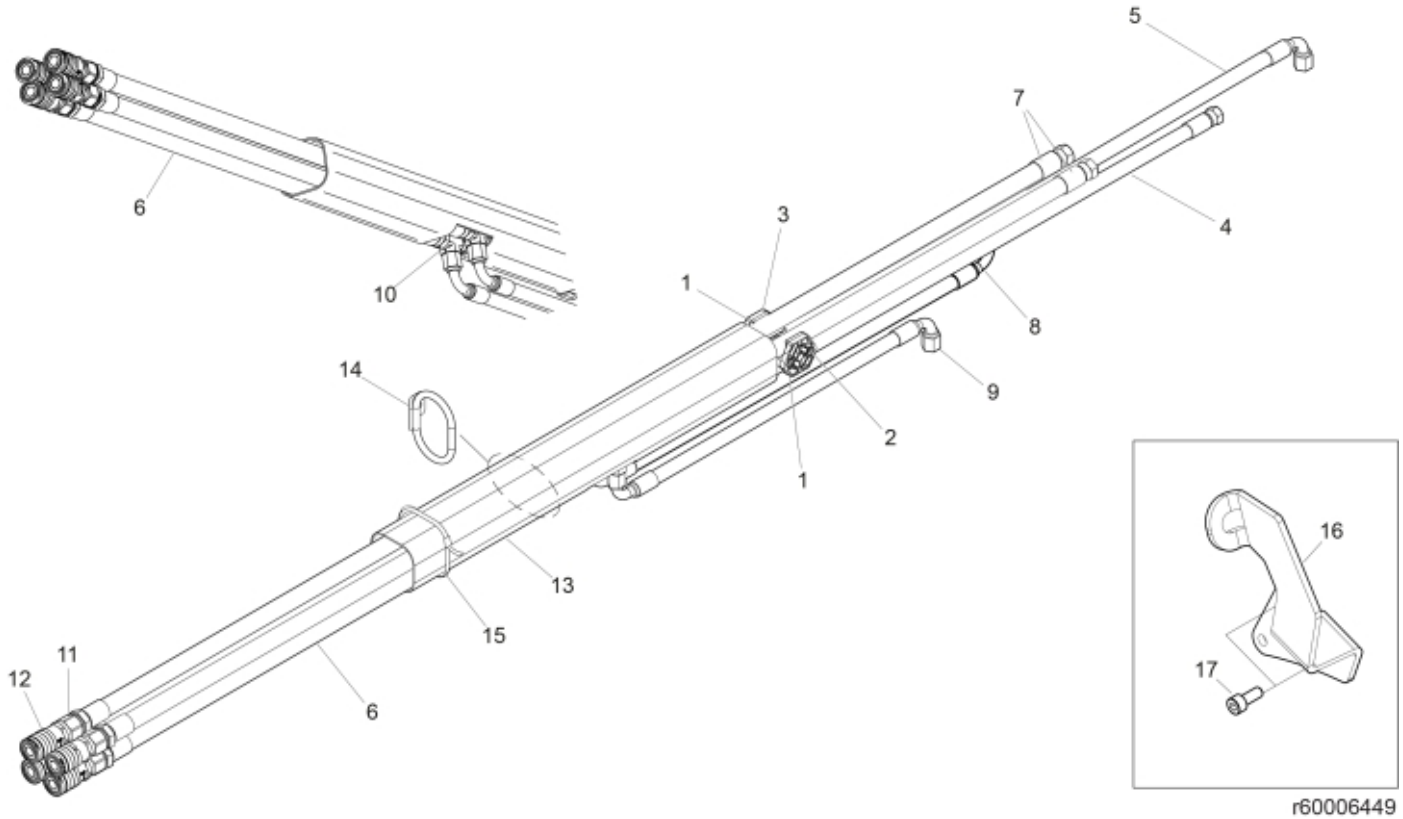

r60006449

© 2025 Jost

Description	no harness
Part assemblies	Main hose kit

PartNo	Pos	Qty	Name	Specifications
5221880	1	2	Hose clamp	
5004030	2	2	Screw	MC6S M6 x 45
20708137	3	2	Nut	M6 FZB, 708137
9032473	4	1	Hose	3/8" L=3653mm
9032472	5	1	Hose	3/8" L=4007mm
9032331	6	2	Hose	3/8" L=850mm
9032479	7	2	Hose	3/8" L=2805mm
9031710	8	1	Hose	3/8" L=520mm
9032474	9	1	Hose	3/8" L=375mm
5028142	10	2	Adaptor	JIC 2x9/16 1x3/4
5013853	11	4	Dowty washer	Tredo 1/2", Part is included in kit 60007907 Hose cpl., 9032177 Hose cpl.
5044976	12	4	Coupling	3/8" (5044946)
5051949	13	1	Hose cover	L=850
5221966	14	1	Hose guide	
11902159	15	1	Cable tie	4,5 x 200
60049421	16	1	Holder kit	
5004061	17	2	• Screw	MC6S M8x20

© 2025 Jost