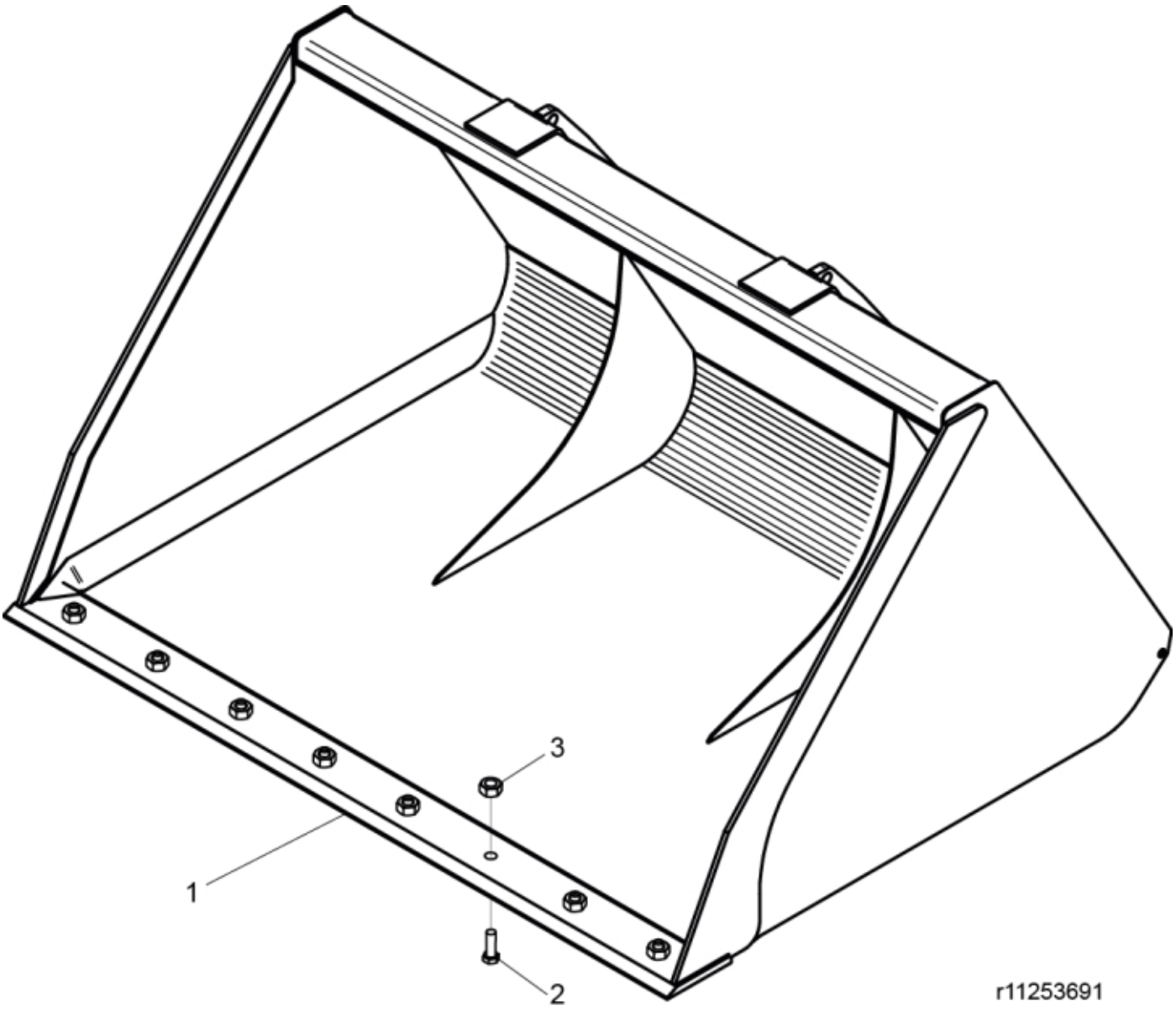



© 2025 Jost

| | |
|---|---|
| **Description** | Bolt-on cutting edge |
| **Part assemblies** | XV Bucket 26,24 Manitou |
| **Specification** | Year From: 1/1/2015 12:00:00 AM |
| | Year To: 7/31/2018 12:00:00 AM |

| PartNo | Pos | Qty | Name | Specifications |
|---|---|---|---|---|
| 60050063 | 1 | 1 PCS | Cutting edge | Bolt-on |
| 5050650 | 2 | 8 PCS | Plow bolt | 3/4" - 2.5 inch |
| 5050652 | 3 | 8 | Locking nut | UNC 3/4" |
| 60001650 | 4 | 2 PCS | Decal | Original Implements 361,7x100 |


© 2025 Jost