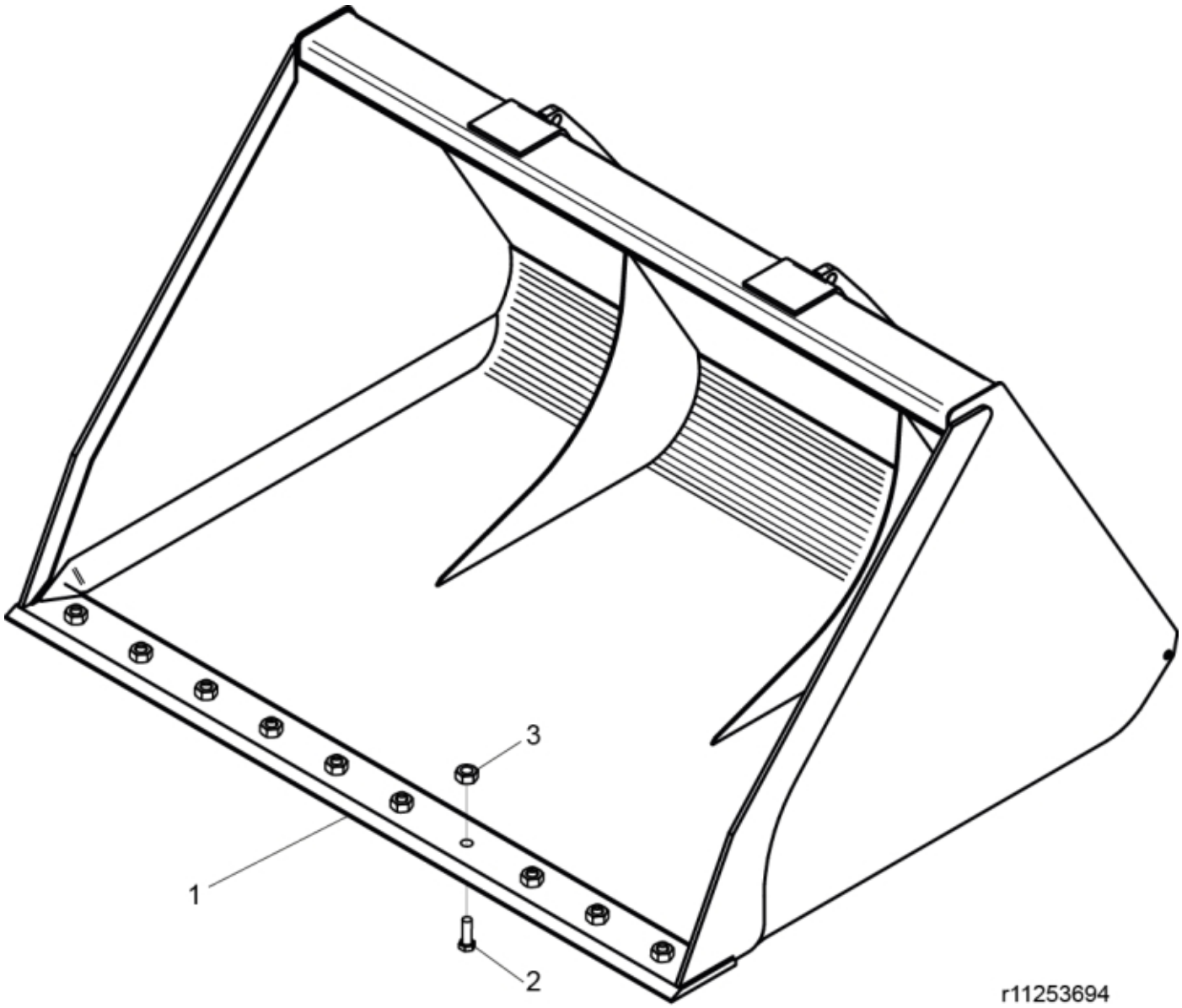

© 2025 Jost

Description	Bolt-on cutting edge
Part assemblies	XV Bucket 43,26 Bobcat FDI
Specification	Year From: 1/1/2015 12:00:00 AM
	Year To: 7/31/2018 12:00:00 AM

PartNo	Pos	Qty	Name	Specifications
60050061	1	1 PCS	Cutting edge	Bolt-on
5050300	2	10	Screw	7/8"x3.5 UNC
5050262	3	10 PCS	Nut	
60001650	4	2 PCS	Decal	Original Implements 361,7x100

© 2025 Jost