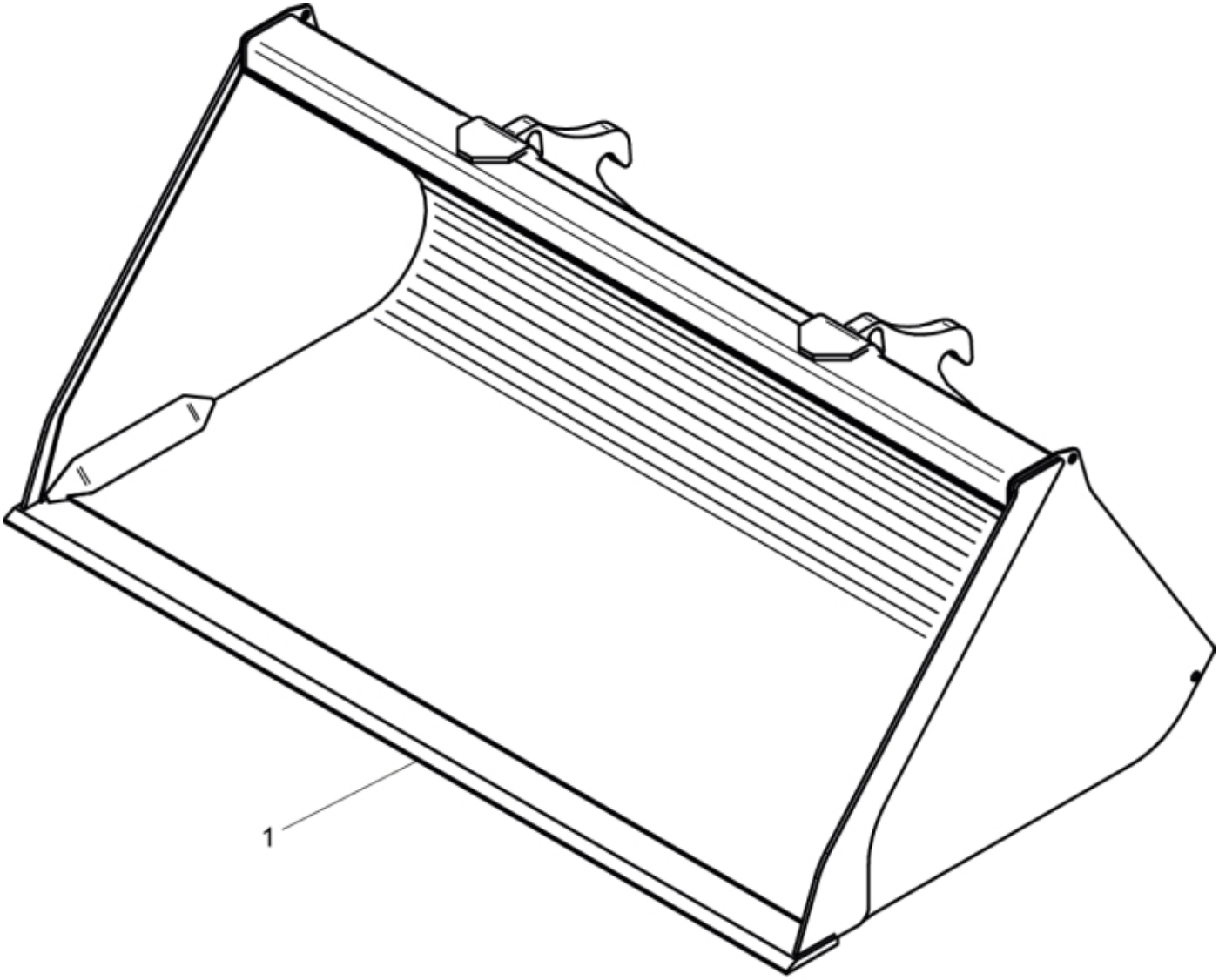

r11253435

© 2025 Jost

Part assemblies	HDX Bucket 11,23 JLG
Specification	Year From: 8/1/2015 12:00:00 AM
	Year To: 12/31/2016 12:00:00 AM

PartNo	Pos	Qty	Name	Specifications
60050067	1	1 PCS	Cutting edge	
60001650	2	2 PCS	Decal	Original Implements 361,7x100

© 2025 Jost