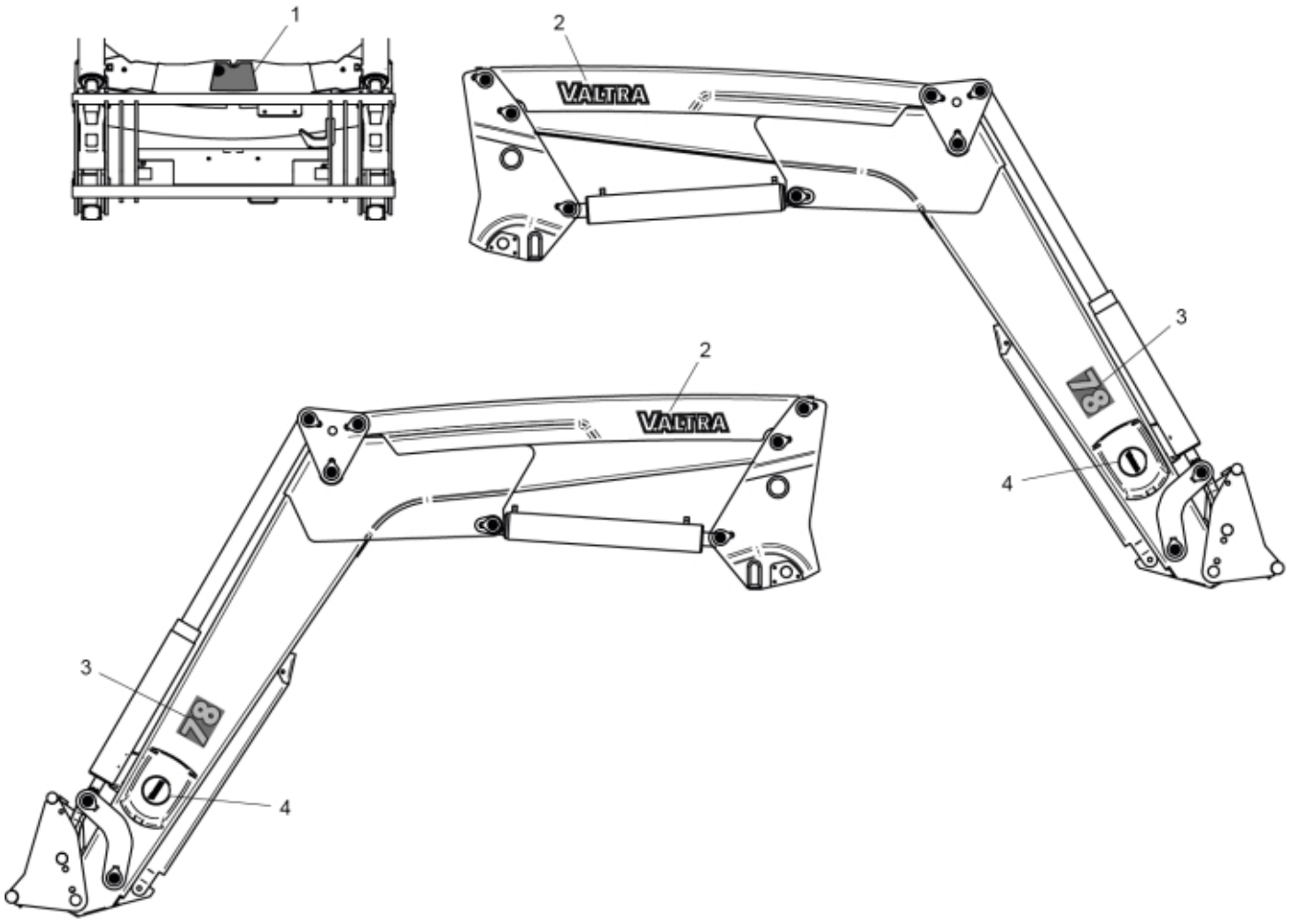

r60006690

© 2025 Jost

Part assemblies Decal kit Valtra 78

PartNo	Pos	Qty	Name	Specifications
11133936	1	1 PCS	Trapezoid decal	
11133937	2	2	Decal, Brand	
60006686	3	2 PCS	Decal, Model	78
11133935	4	2 PCS	Decal, Circular	Valtra

© 2025 Jost